Chipsmall Limited consists of a professional team with an average of over 10 year of expertise in the distribution of electronic components. Based in Hongkong, we have already established firm and mutual-benefit business relationships with customers from,Europe,America and south Asia,supplying obsolete and hard-to-find components to meet their specific needs.

With the principle of “Quality Parts,Customers Priority,Honest Operation,and Considerate Service”,our business mainly focus on the distribution of electronic components. Line cards we deal with include Microchip,ALPS,ROHM,Xilinx,Pulse,ON,Everlight and Freescale. Main products comprise IC,Modules,Potentiometer,IC Socket,Relay,Connector.Our parts cover such applications as commercial,industrial, and automotives areas.

We are looking forward to setting up business relationship with you and hope to provide you with the best service and solution. Let us make a better world for our industry!

Contact us

Tel: +86-755-8981 8866 Fax: +86-755-8427 6832
Email & Skype: info@chipsmall.com Web: www.chipsmall.com
Address: A1208, Overseas Decoration Building, #122 Zhenhua RD., Futian, Shenzhen, China

Apr.1.2017 Copyright 2017 HIROSE ELECTRIC CO., LTD. All Rights Reserved.

	COUNT	DESCRIPTION OF REVISIONS	BY	CHKD	DATE		COUNT	DESCRIPTION OF REVISIONS	BY	CHKD	DATE
△					. .	△					. .
△					. .	△					. .
△					. .	△					. .

NUMBER OF CONTACT	CODE NO.	PART NO.	A	B	NUMBER OF CONTACT	CODE NO.	PART NO.	A	B
4	544-0078-3	DF4- 4DP-2C	4.8	2.0	20	544-0086-1	DF4-20DP-2C	20.8	18.0
6	544-0079-6	DF4- 6DP-2C	6.8	4.0	22	544-0087-4	DF4-22DP-2C	22.8	20.0
8	544-0080-5	DF4- 8DP-2C	8.8	6.0	24	544-0088-7	DF4-24DP-2C	24.8	22.0
10	544-0081-8	DF4-10DP-2C	10.8	8.0	26	544-0089-0	DF4-26DP-2C	26.8	24.0
12	544-0082-0	DF4-12DP-2C	12.8	10.0	28	544-0090-9	DF4-28DP-2C	28.8	26.0
14	544-0083-3	DF4-14DP-2C	14.8	12.0	30	544-0091-1	DF4-30DP-2C	30.8	28.0
16	544-0084-6	DF4-16DP-2C	16.8	14.0	32	544-0092-4	DF4-32DP-2C	32.8	30.0
18	544-0085-9	DF4-18DP-2C	18.8	16.0					

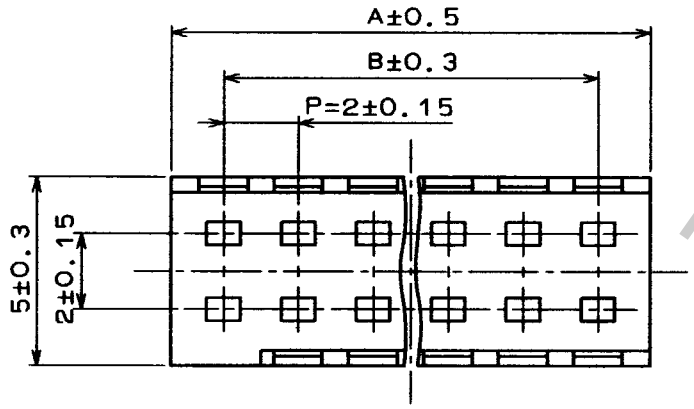

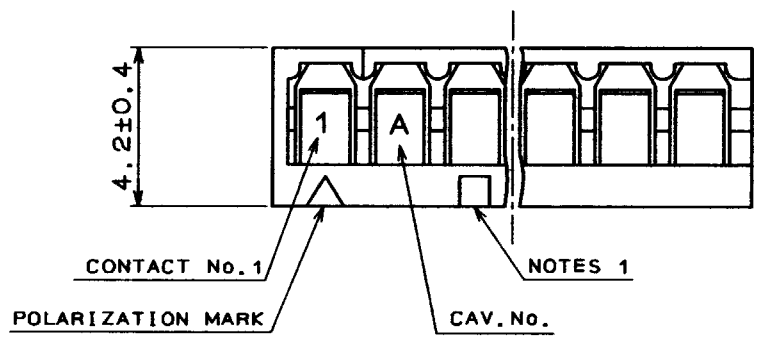

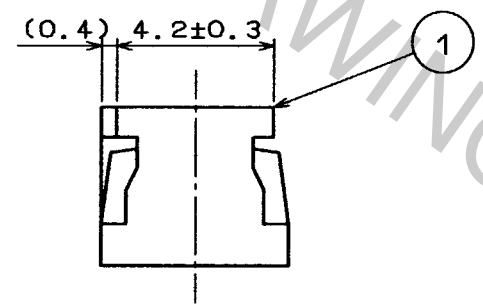

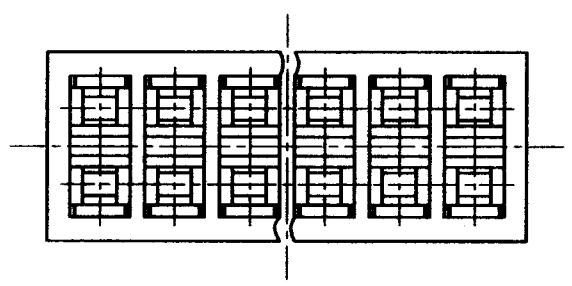

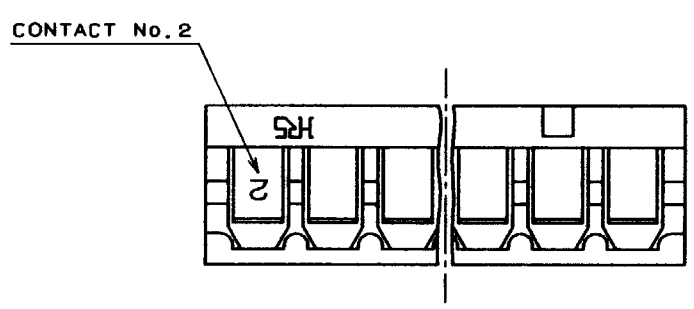

CRIMP CONTACT INSERTION DRAWING

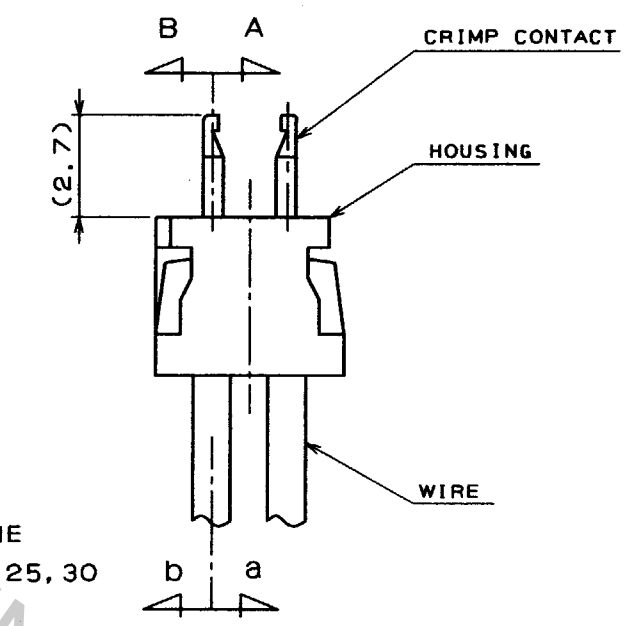

NOTES 1. SQUARE MARKS ARE INDICATED IN RELIEF ON THE PART OF FOLLOWING CONTACT NO.: 5,10,15,20,25,30
2. RECOMMENDED PCB HOLE DIAMETER 0.9±0.05mm
3. IN CASE OF SOME THIN JACKET WIRES, TIPS ARE HARD TO PUT TOGETHER.
HOWEVER, THE WAY OF HOLDING THESE WIRES MAKES EASIER TO PUT THEM INTO PCB.
EX. WHEN THE DIRECTION OF CONTACT TIP IS (A), PLEASE HOLD A WIRE TO THE DIRECTION(a).

HRS DRAWING FOR REFERENCE

NO.	MATERIAL	FINISH, REMARKS	NO.	MATERIAL	FINISH, REMARKS
			1	POLYAMIDE	(BLACK)UL94V-0

CODE NO. (OLD)	DRAWN	DESIGNED	CHECKED	APPROVED	RELEASED
	T.Miyazaki 95.4.18	T.Miyazaki 95.4.18	J.Oma 95.4.18	H.Yamamoto 95.4.18	

SCALE 5 : 1	DRAWING NO. EDC3-160366	PART NO. DF4-✱DP-2C
UNITS mm	HRS HIROSE ELECTRIC CO., LTD.	CODE NO. CL544-0078-3 ~0092-4

1/1

FORM No. 229

TO