Chipsmall Limited consists of a professional team with an average of over 10 year of expertise in the distribution of electronic components. Based in Hongkong, we have already established firm and mutual-benefit business relationships with customers from,Europe,America and south Asia,supplying obsolete and hard-to-find components to meet their specific needs.

With the principle of “Quality Parts,Customers Priority,Honest Operation,and Considerate Service”,our business mainly focus on the distribution of electronic components. Line cards we deal with include Microchip,ALPS,ROHM,Xilinx,Pulse,ON,Everlight and Freescale. Main products comprise IC,Modules,Potentiometer,IC Socket,Relay,Connector.Our parts cover such applications as commercial,industrial, and automotives areas.

We are looking forward to setting up business relationship with you and hope to provide you with the best service and solution. Let us make a better world for our industry!

Contact us

Tel: +86-755-8981 8866 Fax: +86-755-8427 6832
Email & Skype: info@chipsmall.com Web: www.chipsmall.com
Address: A1208, Overseas Decoration Building, #122 Zhenhua RD., Futian, Shenzhen, China

May.1.2017 Copyright 2017 HIROSE ELECTRIC CO., LTD. All Rights Reserved.

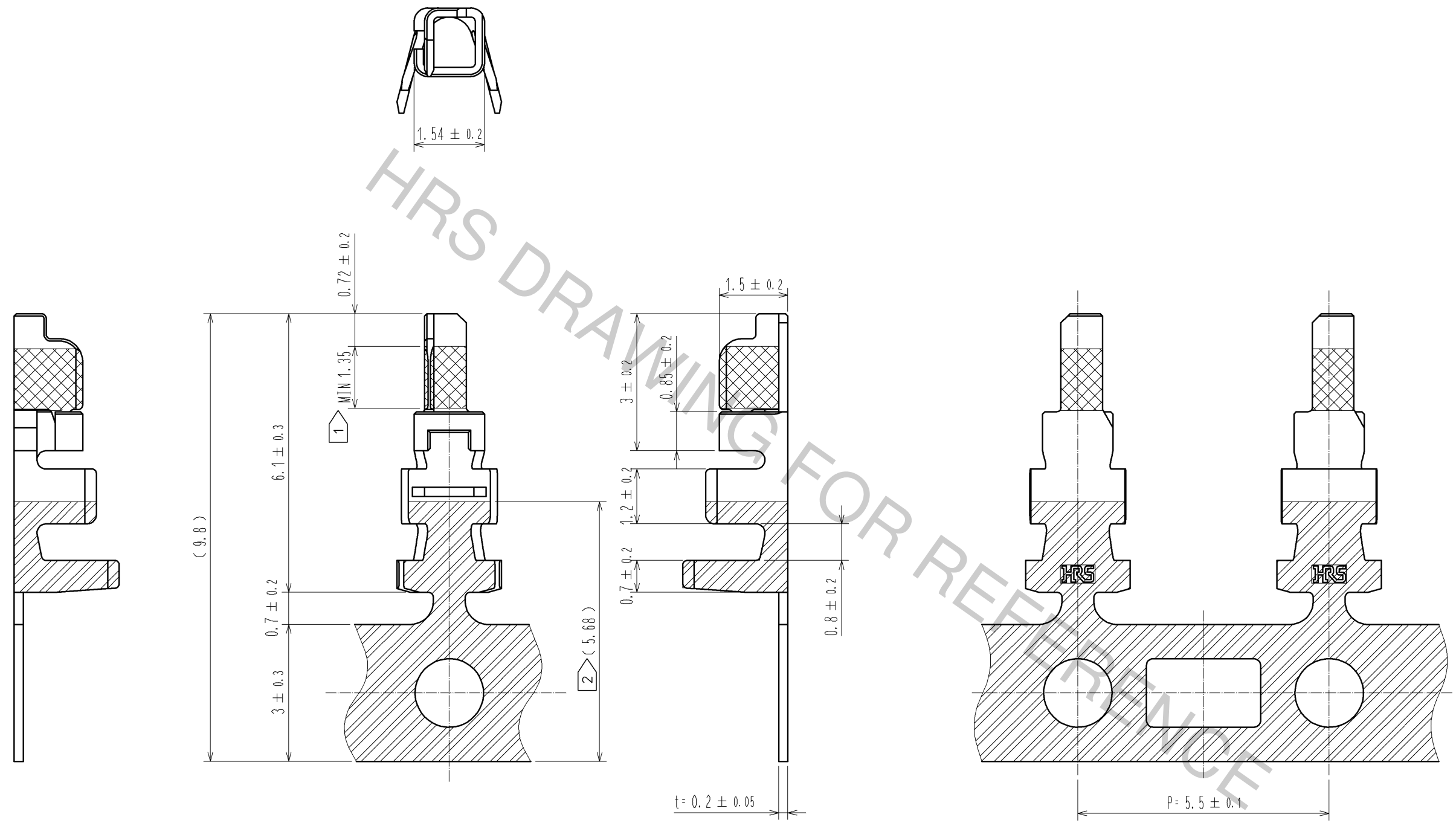

HRS DRAWING FOR REFERENCE

NOTE. 1 GOLD PLATING AREA POSITION.
2 TIN PLATING AREA POSITION.
3 1REEL : 10000 CONTACTS.
1 4 UL(FILE NO. E52653).
C-UL(FILE NO. E52653) APPROVED PRODUCT.

NO.	MATERIAL	FINISH , REMARKS	NO.	MATERIAL	FINISH , REMARKS
			1	PHOSPHOR BRONZE	CONTACT AREA : GOLD PLATING 0.2 μm MIN CARRIER AREA : TIN PLATING 1μm MIN OTHERS : NICKEL PLATING 0.5 μm MIN

UNITS	SCALE		COUNT	DESCRIPTION OF REVISIONS	DESIGNED	CHECKED	DATE
mm	5 : 1	1	1	DIS-H-006791	ST. SATO	HK. UMEHARA	12.04.13

HRS HIROSE ELECTRIC CO., LTD.

APPROVED : KI. AKIYAMA	10.09.28	DRAWING NO. EDC3-331131-01
CHECKED : OM. MIYAMOTO	10.09.27	PART NO. DF59-22PCFA
DESIGNED : KT. ISHII	10.09.27	
DRAWN : KT. ISHII	10.09.27	CODE NO. CL667-0016-8-00

1 1/1

FORM HC0011-5-7