Chipsmall Limited consists of a professional team with an average of over 10 year of expertise in the distribution of electronic components. Based in Hongkong, we have already established firm and mutual-benefit business relationships with customers from,Europe,America and south Asia,supplying obsolete and hard-to-find components to meet their specific needs.

With the principle of “Quality Parts,Customers Priority,Honest Operation,and Considerate Service”,our business mainly focus on the distribution of electronic components. Line cards we deal with include Microchip,ALPS,ROHM,Xilinx,Pulse,ON,Everlight and Freescale. Main products comprise IC,Modules,Potentiometer,IC Socket,Relay,Connector.Our parts cover such applications as commercial,industrial, and automotives areas.

We are looking forward to setting up business relationship with you and hope to provide you with the best service and solution. Let us make a better world for our industry!

Contact us

Tel: +86-755-8981 8866 Fax: +86-755-8427 6832
Email & Skype: info@chipsmall.com Web: www.chipsmall.com
Address: A1208, Overseas Decoration Building, #122 Zhenhua RD., Futian, Shenzhen, China

Apr.1.2017 Copyright 2017 HIROSE ELECTRIC CO., LTD. All Rights Reserved.

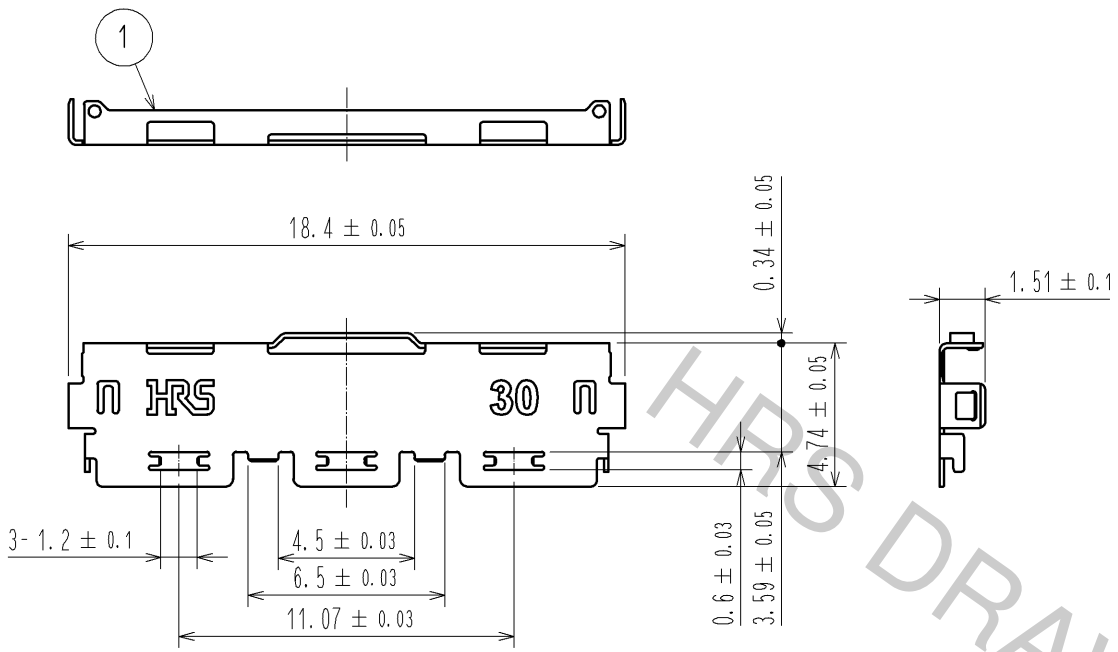

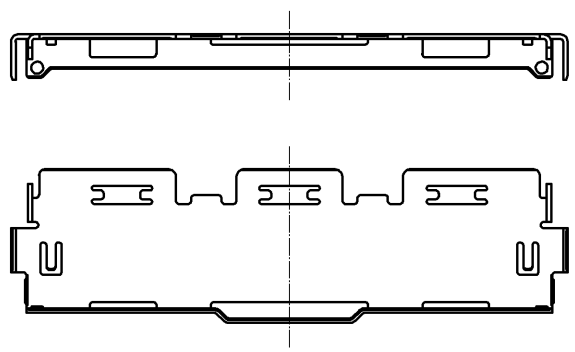

REEL STATE DRAWING (FREE)

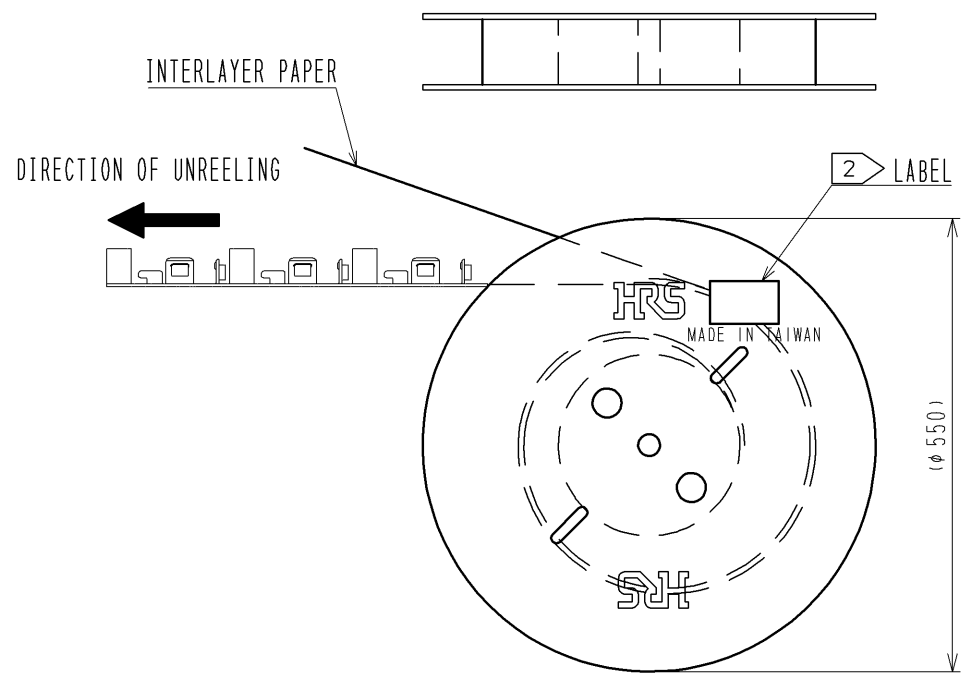

CAREER STATE DRAWING(FREE)

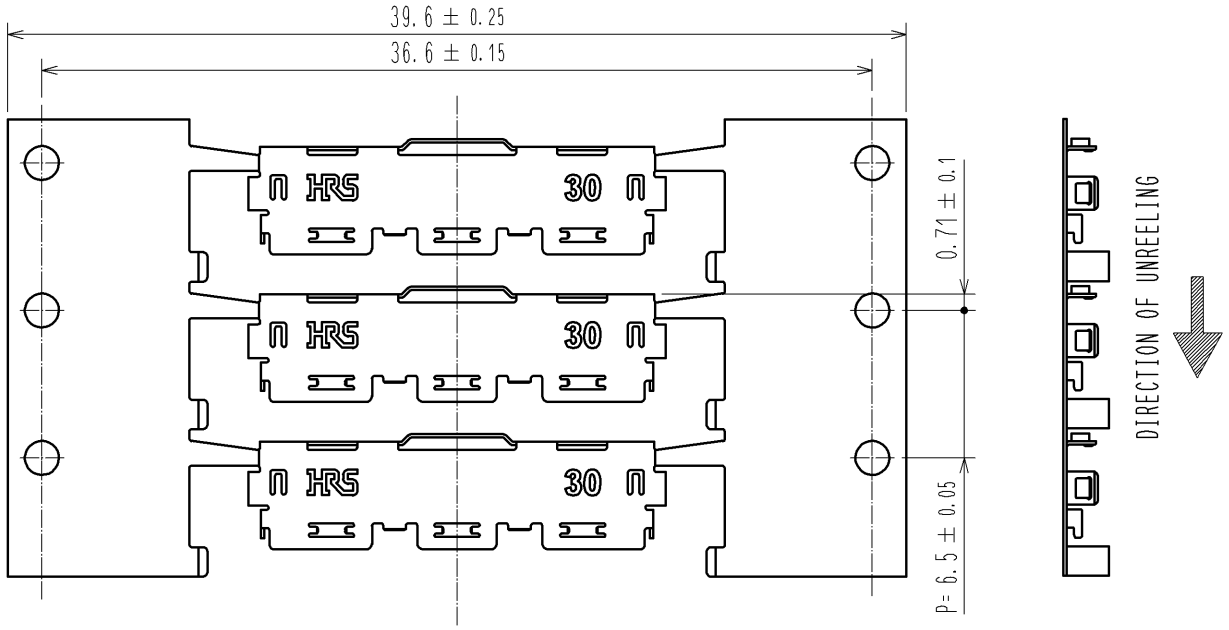

NOTES

1. PER REEL:10000 COMPONENTS
2. DETAILS OF THE LABEL ARE SHOWN BELOW.
3. THE ASSEMBLY IS COMPLETED BY COMBINING TWO PARTS "CONNECTOR UNIT, AND METAL SHIELDING". REFER TO THE TABLE FOR EACH ITEM No. PART NAME, PART No AND CODE No.

2 LABEL DETAILS

HRS		INSPECTION 検 査
CODE No. 品名コード	CL662-8006-6	
PART NO. 品 名	DF80-30P-SHL	
QTY 数 量	10,000 PCS	
PECULIAR 仕 様		
Lot No		
SPLICE 継ぎ目		

3

	ITEM No.	PART NAME	PART No.	CODE No.
1	-	CONNECTOR UNIT	DF80D-30P-0.5SD(51)	CL662-8018-5-51
	1	METAL SHIELDING	DF80-30P-SHL	CL662-8006-6-00

NO.	MATERIAL	FINISH . REMARKS
1	STAINLESS	WHOLE AREA : Sn PLATING 1μmMIN UNDER PLATING : Ni PLATING 0.2μmMIN

UNITS	SCALE		COUNT	DESCRIPTION OF REVISIONS	DESIGNED	CHECKED	DATE
mm	FREE	1	1	DIS-D-003054	IO. DENPOUYA	MH. TSUCHIDA	13.10.22

HRS HIROSE ELECTRIC CO., LTD.

APPROVED	: TS. SAKATA	12.04.18	DRAWING NO.	EDC3-338298-01
CHECED	: TS. SAKATA	12.04.18	PART NO.	DF80-30P-SHL
DESIGNED	: IO. DENPOUYA	12.04.18	CODE NO.	CL662-8006-6-00
DRAWN	: IO. DENPOUYA	12.04.18		1/1

HRS DRAWING FOR REFERENCE