Chipsmall Limited consists of a professional team with an average of over 10 year of expertise in the distribution of electronic components. Based in Hongkong, we have already established firm and mutual-benefit business relationships with customers from,Europe,America and south Asia,supplying obsolete and hard-to-find components to meet their specific needs.

With the principle of “Quality Parts,Customers Priority,Honest Operation,and Considerate Service”,our business mainly focus on the distribution of electronic components. Line cards we deal with include Microchip,ALPS,ROHM,Xilinx,Pulse,ON,Everlight and Freescale. Main products comprise IC,Modules,Potentiometer,IC Socket,Relay,Connector.Our parts cover such applications as commercial,industrial, and automotives areas.

We are looking forward to setting up business relationship with you and hope to provide you with the best service and solution. Let us make a better world for our industry!

Contact us

Tel: +86-755-8981 8866 Fax: +86-755-8427 6832
Email & Skype: info@chipsmall.com Web: www.chipsmall.com
Address: A1208, Overseas Decoration Building, #122 Zhenhua RD., Futian, Shenzhen, China

版数 REV.	年月日 DATE	DCN NO.	変更内容 DESCRIPTION	製図 DR.	担当 CHK.	査閲 APPD.	承認 APPD.

図面番号(DRAWING NO.) SJ101404

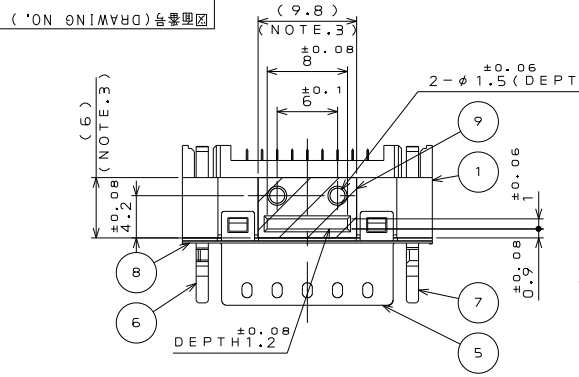

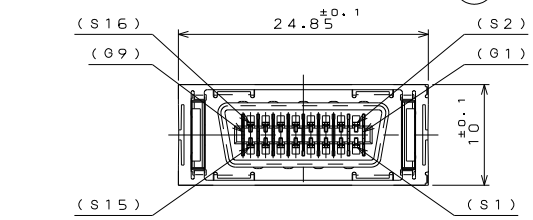

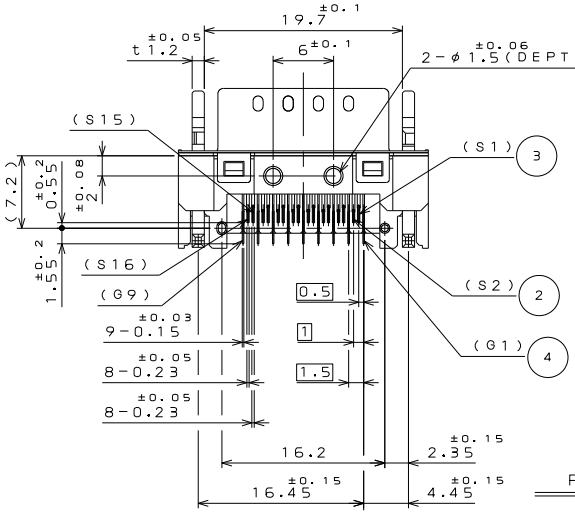

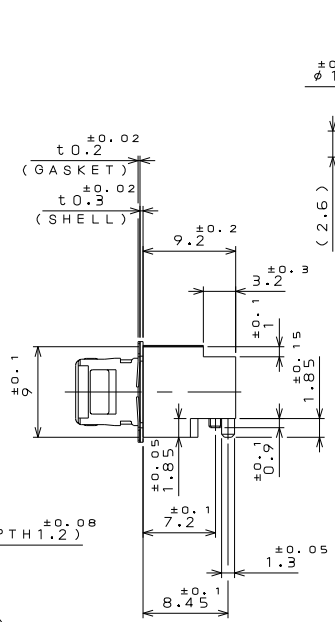

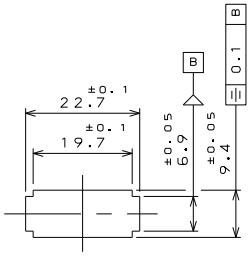

PANEL CUTOUT DIMENSION

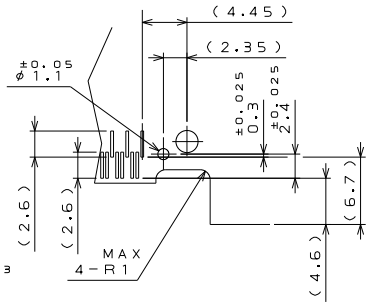

DETAIL A

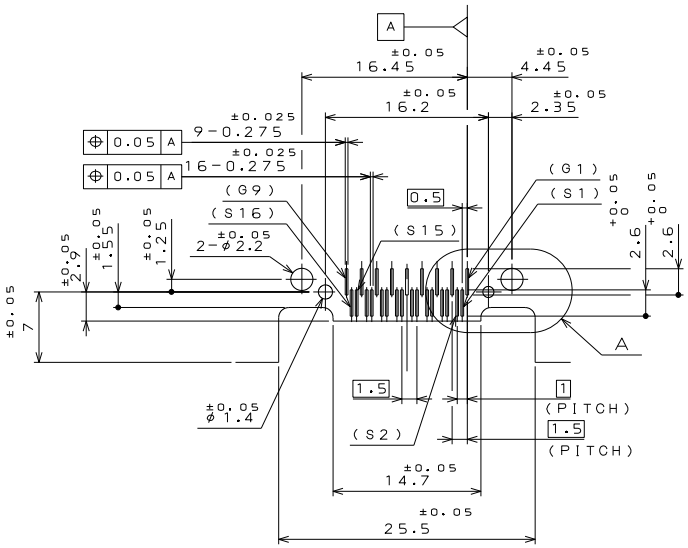

APPLICABLE P.C.B. DIMENSION(REF.)

符号 NO.	名称 DESCRIPTION	個数 QTY.	材料 MATERIAL	仕上 FINISH	備考 REMARKS
9	TAPE	1	ARAMID PAPER	――	――
8	GASKET	1	STAINLESS STEEL	――	――
7	LOCK PLATE R	1	STEEL	Sn	――
6	LOCK PLATE L	1	STEEL	Sn	――
5	SHELL	1	STEEL	NICKEL	――
4	GROUND CONTACT	9	COPPER ALLOY	MATING AREA:Au SMT AREA:Sn	――
3	SIGNAL CONTACT 2	8	COPPER ALLOY	MATING AREA:Au SMT AREA:Sn	――
2	SIGNAL CONTACT 1	8	COPPER ALLOY	MATING AREA:Au SMT AREA:Sn	――
1	INSULATOR	1	GLASS FILLED LCP	――	COLOR:BLACK UL94V-0

NOTE 1. COPLANARITY IS 0.1mm MAXIMUM.
NOTE 2. MATING SPECIFICATION OF THE PLUG CONNECTOR MUST BE ACCORDANCE WITH INFINIBAND STANDARD.
NOTE 3. THIS AREA IS VACUUMED SURFACE.

注1.コプラナリティは0.1以下。
注2.プラグコネクタの嵌合面仕様は標準インフィニバンド規格に従わなければならない。
注3.本箇所は吸引面である。

仕様書(SPECIFICATION) JACS-3284	第1版(ORIGINAL DATE) 29.Sep.2004	尺度(SCALE) 2:1	シリーズ(SERIES) DG1
一般公差(GENERAL TOLERANCE) 寸法(DIMENSION): .±0.8, .X±0.4, .XX±0.1, .XXX± 角度(ANGLES): X° ±, X°X'±	製図 DR. ――	名称(TITLE) DG1R025HSA (4X RECEPTACLE)	日本航空電子工業株式会社 JAPAN AVIATION ELECTRONICS INDUSTRY, LTD.
	担当 CHK. K.KOTAKA		
	査閲 APPD. ――		
	承認 APPD. G.HAGA	質量(MASS)	図面番号(DRAWING NO.) SJ101404
			版数 (REV.) 1

SIZE A3

DCF-C-212E(03.08)

0 10 20 30 40 50 60 70 80 90 100

JAE CONNECTOR DIV. PROPRIETARY.
COPYRIGHT (C) 2004, JAPAN AVIATION ELECTRONICS INDUSTRY, LTD.