Chipsmall Limited consists of a professional team with an average of over 10 year of expertise in the distribution of electronic components. Based in Hongkong, we have already established firm and mutual-benefit business relationships with customers from,Europe,America and south Asia,supplying obsolete and hard-to-find components to meet their specific needs.

With the principle of “Quality Parts,Customers Priority,Honest Operation,and Considerate Service”,our business mainly focus on the distribution of electronic components. Line cards we deal with include Microchip,ALPS,ROHM,Xilinx,Pulse,ON,Everlight and Freescale. Main products comprise IC,Modules,Potentiometer,IC Socket,Relay,Connector.Our parts cover such applications as commercial,industrial, and automotives areas.

We are looking forward to setting up business relationship with you and hope to provide you with the best service and solution. Let us make a better world for our industry!

Contact us

Tel: +86-755-8981 8866 Fax: +86-755-8427 6832
Email & Skype: info@chipsmall.com Web: www.chipsmall.com
Address: A1208, Overseas Decoration Building, #122 Zhenhua RD., Futian, Shenzhen, China

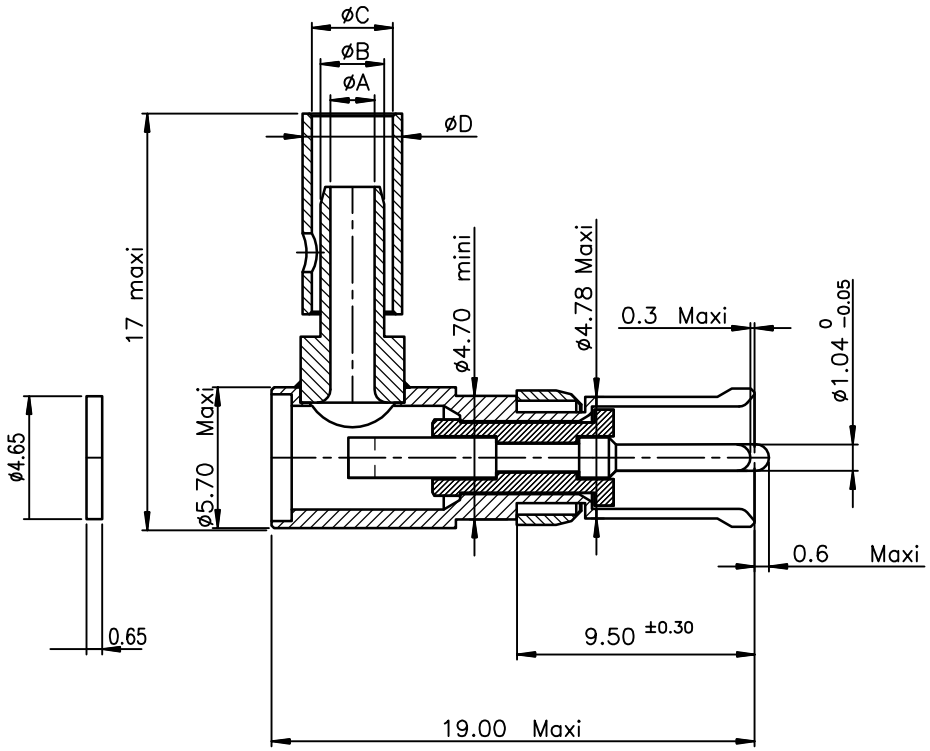

ELECTRICAL CHARACTERISTICS

- Impedance: 50 Ohm
- Working frequency: 1GHz max
- Dielectric with standing voltage: 600V
- Insulation resistance 5000: 14 Ohm
- Contact resistance < 5 mOhm
- Insertion lost: < 0.2 dB

MECHANICAL CHARACTERISTICS

- Mating force per set of contact 0.4 N to 9 N
- Mating endurance 500
- Temperature −55°C to +125 °C

TOOLING

- Coaxial contact extraction tool 8630−07A

NOTE:RoHS INFORMATIONS

- The "LF" product meets European union Directives and other country regulations as described in GS−22−008.
- The product is not intented to be exposed to a manufacturing solder process.
- Packaging spec: see GS−14−920.

PART NUMBER	DESIGNATION	øA +0.10 0	øB ±0.05	øC +0.10 0	øD ±0.10	CABLE REF.
DM537435000NCLF	RIGHT ANGLE SOCKET COAXIAL CONTACT	1.00	1.75	2.32	3.20	RG 178 B/U RG 196 A/U KX 21 A

rev	ecn no	dr	date
A	LS05−0086	MPE	2005/10/14
B	LS05−0107	MPE	2005/12/20
C	LS07−0001	MPE	2007/01/09
D	LS07−0160	MPE	2007/06/11
E	F10−0086	LSA	2010/08/20
−	−	−	−
−	−	−	−

www.fciconnect.com

surface ISO 1302 | tolerance std ISO 406 ISO 1101 | projection | mm

TOLERANCES UNLESS OTHERWISE SPECIFIED

Dr	PESSON	2005/10/14	ANGULAR	LINEAR	0.X	±0.1
Eng	PESSON	2005/10/14			0.XX	±0.1
Chr	LEGARE	2005/10/14	0.XX° ±2'		0.XXX	±0.1
Appr	LEGARE	2005/10/14	Product family		D−SUB	

size A3 | Scale 5 | ECN F10−0086 | Spec ref −

title: RIGHT ANGLE SOCKET COAXIAL CONTACT SOLDER TO CABLE

dwg no C01−8639−2149 | Rev. E

catalog no | CUSTOMER | sheet 1 of 1

REV F − 2006−04−17

Copyright FCI.

PDM: Rev:E STATUS: Released Printed: Oct 01, 2010