Chipsmall Limited consists of a professional team with an average of over 10 year of expertise in the distribution of electronic components. Based in Hongkong, we have already established firm and mutual-benefit business relationships with customers from,Europe,America and south Asia,supplying obsolete and hard-to-find components to meet their specific needs.

With the principle of “Quality Parts,Customers Priority,Honest Operation,and Considerate Service”,our business mainly focus on the distribution of electronic components. Line cards we deal with include Microchip,ALPS,ROHM,Xilinx,Pulse,ON,Everlight and Freescale. Main products comprise IC,Modules,Potentiometer,IC Socket,Relay,Connector.Our parts cover such applications as commercial,industrial, and automotives areas.

We are looking forward to setting up business relationship with you and hope to provide you with the best service and solution. Let us make a better world for our industry!

Contact us

Tel: +86-755-8981 8866 Fax: +86-755-8427 6832
Email & Skype: info@chipsmall.com Web: www.chipsmall.com
Address: A1208, Overseas Decoration Building, #122 Zhenhua RD., Futian, Shenzhen, China

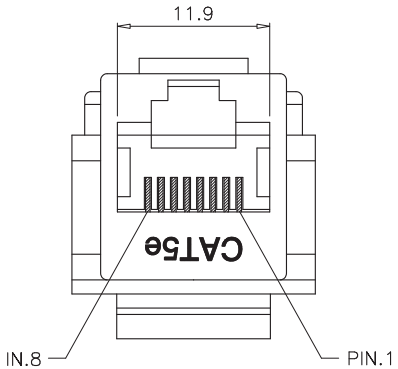

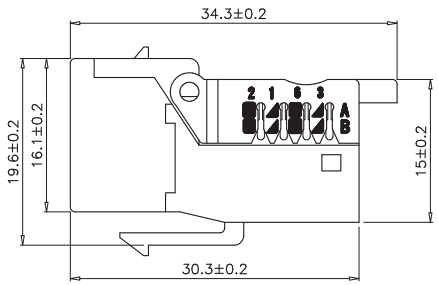

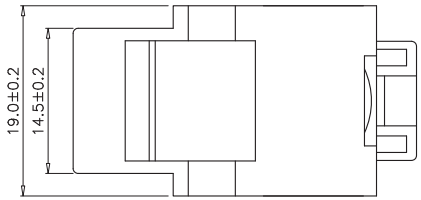

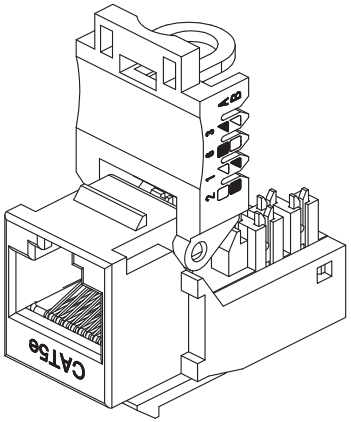

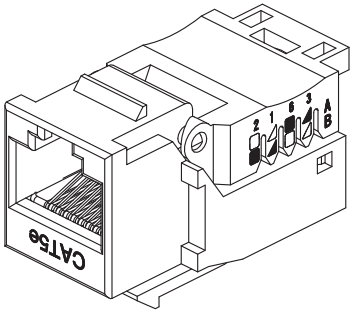

Material:

1 RJ45 Jack Housing: ABS, UL94V-0
- with optional color

2. Jack Bracket Set: PBT, UL94V-0
3. RJ45 Jack Contact Material & Finished
   - Phosphor Bronze
   - Contact area: Min. 3MM 50 Micro-inch Gold plated over Nickel plated
4. IDC Housing: PC, 94V-2
5. IDC Terminal material & finished:
   - Phosphor Bronze w/Min. 50 Micro-inch Tin plated
   - Suitable for 23-24AWG stranded & solid wire
6. IDC CAP: PC, UL94V-2

Electrical:

- Wiring: T568A & T568B
- Insertion Force: 900 GM for 8 contacts
- Retention Strength: 7.7Kg between Jack & Plug
- Operating Temperature: -10°C ~ +60°C
- Durability: Jack: 750 cycles Plug-Jack mating and unmating test, Insertion cycles at 20 cycles/ minute max. Contact resistance test per 100 cycles.
- The Cat.5e transmission performance is in compliance with the ANSI/TIA/EIA 568 B.2 standard

Unit: MM±0.1MM

DIGITUS®

RoHS Complaint

Scale	1:1
TOLERANCE	
X.X	±0.40
X.XX	±0.25
X.XXX	±0.15
Angle	±3°

Modification	Date	Name

		Name
Drawn	12.20.11	Chappell
Approved		

ASSMANN WSW components

Item No.

DN-93501-U/WH

Title: Cat5e Unshielded Keystone Jack - 90° Tool Free Type, white

Drawing No.

rev00

Replace

Sheet