Chipsmall Limited consists of a professional team with an average of over 10 year of expertise in the distribution of electronic components. Based in Hongkong, we have already established firm and mutual-benefit business relationships with customers from,Europe,America and south Asia,supplying obsolete and hard-to-find components to meet their specific needs.

With the principle of “Quality Parts,Customers Priority,Honest Operation,and Considerate Service”,our business mainly focus on the distribution of electronic components. Line cards we deal with include Microchip,ALPS,ROHM,Xilinx,Pulse,ON,Everlight and Freescale. Main products comprise IC,Modules,Potentiometer,IC Socket,Relay,Connector.Our parts cover such applications as commercial,industrial, and automotives areas.

We are looking forward to setting up business relationship with you and hope to provide you with the best service and solution. Let us make a better world for our industry!

Contact us

Tel: +86-755-8981 8866 Fax: +86-755-8427 6832
Email & Skype: info@chipsmall.com Web: www.chipsmall.com
Address: A1208, Overseas Decoration Building, #122 Zhenhua RD., Futian, Shenzhen, China

THIS COPY IS PROVIDED ON A RESTRICTED BASIS AND IS NOT TO BE USED IN ANY WAY DETRIMENTAL TO THE INTERESTS OF PANDUIT CORP.

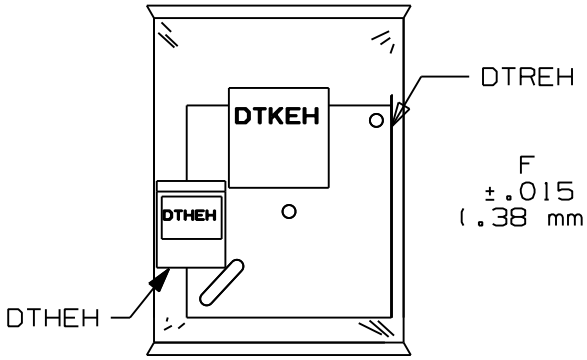

THE DTKEH KIT CONTAINS:

QTY	PART
1	DTHEH 25 HEADS
1	DTREH 50' REEL OF STRAPPING

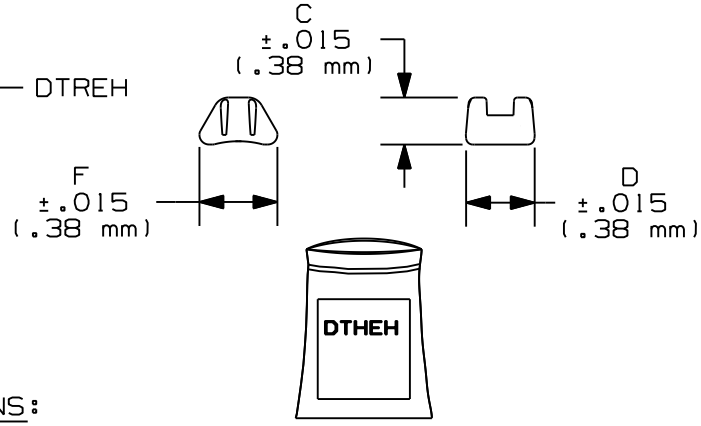

RECLOSABLE BAG OF 25 HEADS

DTHEH

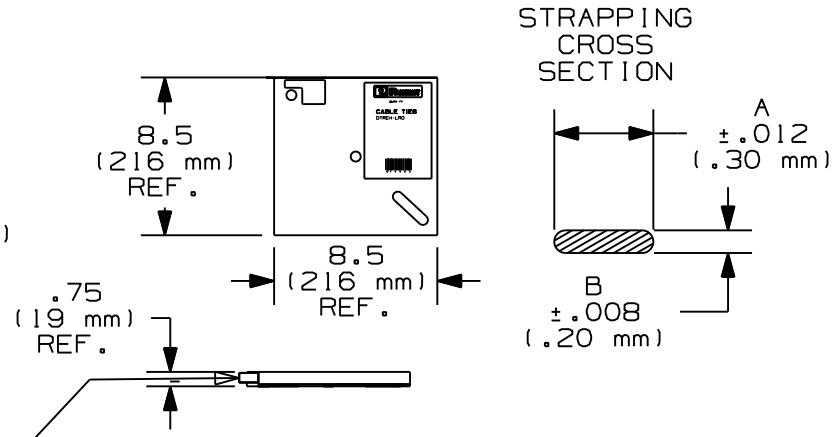

DTREH

PANDUIT* PART NO.	DESCRIPTION	BUNDLE DIA. MIN. in. (mm)	BUNDLE DIA. MAX. in. (m)	A in. (mm)	B in. (mm)	C in. (mm)	D in. (mm)	F in. (mm)	MINIMUM LOOP TENSILE 2"/MIN. lbs. (N)	APPROX. WEIGHT lbs/(kg) per PACKAGE
DTKEH	DURA-TY KIT 50' STRAPPING 25 HEADS	.020 (.51)	15'-9" (4.8)	.495 (12.57)	.059 (1.50)	.490 (12.45)	.718 (18.24)	.812 (20.62)	250 (1112)	1.2 (.544)
DTHEH	BAG OF 25 HEADS	------ ------	------ ------	----- -----	----- -----	.490 (12.45)	.718 (18.24)	.812 (20.62)	------ ------	.2 (.091)
DTREH	50' REEL OF STRAPPING	.020 (.51)	15'-9" (4.8)	.495 (12.57)	.059 (1.50)	------ ------	------ ------	----- -----	250 (1112)	1 (.454)

* SEE CURRENT PRICE SHEET FOR PART NUMBER SUFFIX DESIGNATION FOR PACKAGE SIZE

DURA-TY CABLE TIES MEET OR EXCEED THE REQUIREMENTS OF TR-TSY-000789, TELCORDIA TECHNOLOGIES.

W10001BR/02 SS-27250 SH2

DIMENSIONS IN PARENTHESES ARE IN METRIC UNITS

REV	DATE	BY	CHK	DESCRIPTION	ECN - R		CUST	SUP
--	----	---		CHANGED DIMENSION 'A' TOLERANCE FROM ±.008 TO ±.012	-----	--		
2	5/13/08	ERW		CHANGED DIMENSION 'A' FOR DTKEH & DTREH FROM .500 TO .495	SS-27250	2		
--	----	--		REVISED DIM 'C' METRIC CONVERSIONS	----	--		
--	----	--		REVISED DIM 'A' METRIC CONVERSIONS	----	--		
1	8/31/07	JABO	TGS	CHANGED PACKAGE VIEW TO MATCH PKG-387 DWG	SS-27250	1	TGS	

PANDUIT CORP. TINLEY PARK, ILLINOIS

DURA-TY
EXTRUDED CABLE TIES (EXTRA HEAVY)

UNLESS OTHERWISE SPECIFIED, DIMENSIONAL TOLERANCES ARE:
(.X) ± (.XXX) ±
(.XX) ± ANGLES ±

UNLESS OTHERWISE SPECIFIED, ALL DIMENSIONS ARE GIVEN IN INCHES, THIRD ANGLE PROJECTION.

DRAWN BY JABO
DATE 12/10/02
CHK'D TGS

MAT'L: STRAP & HEAD - BLACK ACETAL
EACH HEAD HAS TWO, TYPE 302 STAINLESS STEEL BARBS

SCALE N/A
DRAWING NO. SS-27250
SHEET 2 OF 2
DWG A
SIZE