Chipsmall Limited consists of a professional team with an average of over 10 year of expertise in the distribution of electronic components. Based in Hongkong, we have already established firm and mutual-benefit business relationships with customers from,Europe,America and south Asia,supplying obsolete and hard-to-find components to meet their specific needs.

With the principle of “Quality Parts,Customers Priority,Honest Operation,and Considerate Service”,our business mainly focus on the distribution of electronic components. Line cards we deal with include Microchip,ALPS,ROHM,Xilinx,Pulse,ON,Everlight and Freescale. Main products comprise IC,Modules,Potentiometer,IC Socket,Relay,Connector.Our parts cover such applications as commercial,industrial, and automotives areas.

We are looking forward to setting up business relationship with you and hope to provide you with the best service and solution. Let us make a better world for our industry!

Contact us

Tel: +86-755-8981 8866 Fax: +86-755-8427 6832
Email & Skype: info@chipsmall.com Web: www.chipsmall.com
Address: A1208, Overseas Decoration Building, #122 Zhenhua RD., Futian, Shenzhen, China

版数 REV.	年月日 DATE	DCN NO.	変更内容 DESCRIPTION	製図 DR.	担当 CHK.	査閲 APPD.	承認 APPD.
2	18/JAN/2011	071440	誤記(名称、尺度)訂正	—	K.KIMURA	Y.ITOU	Y.MIZUSAWA
3	02/SEP/2011	000151	CORRECT AN ERROR AND REVISED DIMENSION	—	K.KIMURA	Y.ITOU	T.MIYASHITA
4	17/NOV/2011	000843	REVISED FORM AND CORRECT AN ERROR	—	K.KIMURA	Y.ITOU	T.MIYASHITA

図面番号(DRAWING NO.) SJ111310

WISDOM承認 2011/11/30

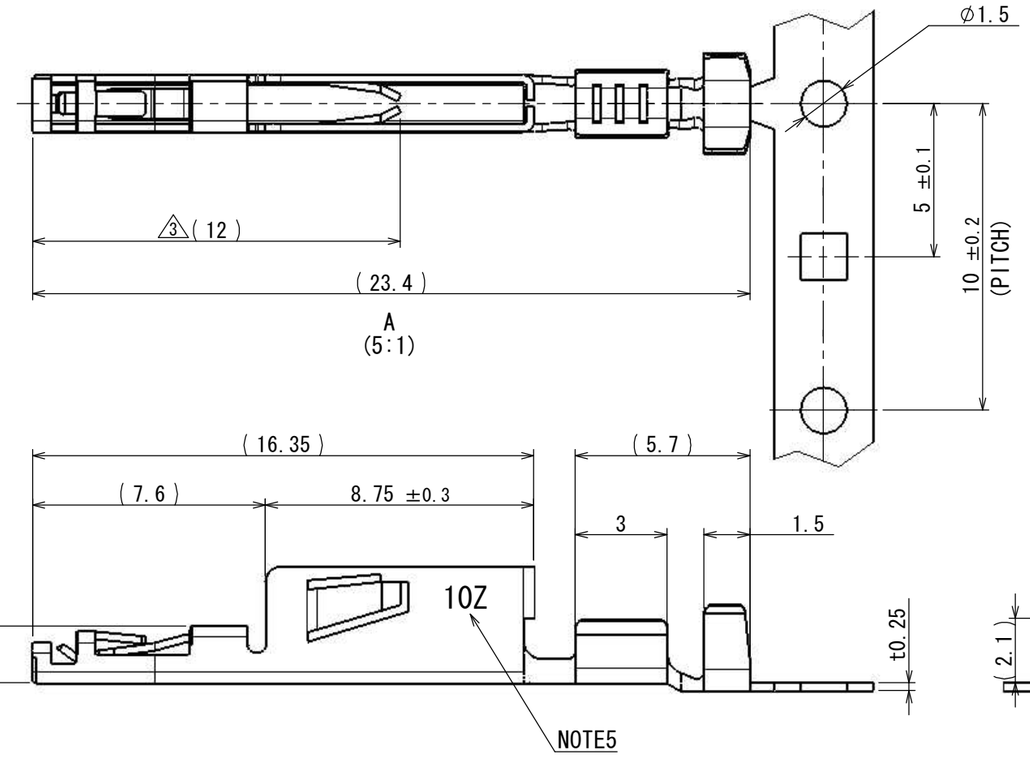

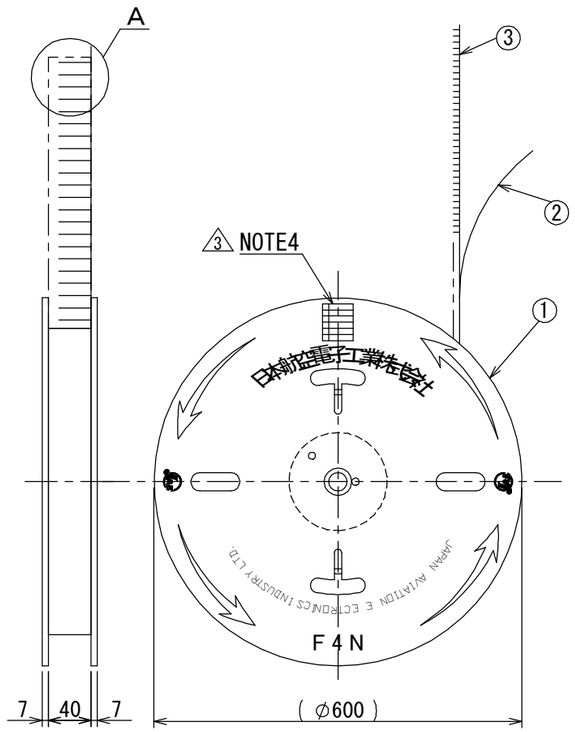

特別管理品目
SPECIAL CONTROL ITEM
Li電池

NOTE 1. THESE CONTACTS ARE SUPPLIED PER REEL. THERE ARE 4,000 CONTACTS PER REEL.
NOTE 2. APPLICABLE MATING PIN : □0.64±0.05/
NOTE 3. APPLICABLE WIRE:AWG#22(0.3mm^2) INSHULATION OUTER DIAMETER:φ1.5(STRANDED)
NOTE 4. PART NUMBER, QUANTITY AS INDICATED.
NOTE 5. YEAR AND MONTH OF MANUFACTURE SHALL BE SHOWN AT THE LOCATION.
(LEFT:ONE LAST DIGIT OF YEAR, RIGHT:MONTH 123456789XYZ)
EX. '10Z'→MANUFACTURED IN DEC. 2010

注1. 本コンタクトはリール状で供給され、4000[PC/リール]とする。
注2. 挿入ピンは板厚□0.64±0.05とする。
注3. 使用電極AWG#22(0.3mm^2) 相当。被覆外径φ1.5の撚線とする。
注4. 図示の位置に品名、数量を記入した現品表が貼られている。
注5. 図示の位置に製造年月日を表示する。
(左側：西暦3桁、4桁目、右側：月123456789XYZ)
例：'10Z'→製造年月2010年12月。

符号 NO.	名称 DESCRIPTION	個数 QTY.	材料 MATERIAL	仕上 FINISH	備考 REMARKS
3	SOCKET CONTACT	4000	COPPER ALLOY	TIN PLATE	—
2	PAPER TAPE	1	PAPER	—	—
1	MAGAZINE	1	PAPER	—	—

仕様書(SPECIFICATION) JACS-30177 JAHL-30177
第1版(ORIGINAL DATE) 05/JAN/2011
製図 DR. K.KIMURA
担当 CHK. T.EBISAWA
査閲 APPD. —
承認 APPD. Y.MIZUSAWA
一般公差(GENERAL TOLERANCE)
寸法(DIMENSION): .±0.8 / .×±0.4 / .××±0.1 / .×××±
角度(ANGLES): ×° ± / ×°×' ±
尺度(SCALE) – 2
シリーズ(SERIES) DW1
名称(TITLE) 2 DW1S04K4F1
質量(MASS) –
日本航空電子工業株式会社
JAPAN AVIATION ELECTRONICS INDUSTRY,LTD.
図面番号(DRAWING NO.) SJ111310
SIZE A3
版数(REV.) 4
S/W
DGF-C-212F(05.08)

JAE-CONNECTOR.COM
Reference Only

JAE Connector DIV. Proprietary.
Copyright(C) 2011, Japan Aviation Electronics Industry, LTD.