Chipsmall Limited consists of a professional team with an average of over 10 year of expertise in the distribution of electronic components. Based in Hongkong, we have already established firm and mutual-benefit business relationships with customers from,Europe,America and south Asia,supplying obsolete and hard-to-find components to meet their specific needs.

With the principle of “Quality Parts,Customers Priority,Honest Operation,and Considerate Service”,our business mainly focus on the distribution of electronic components. Line cards we deal with include Microchip,ALPS,ROHM,Xilinx,Pulse,ON,Everlight and Freescale. Main products comprise IC,Modules,Potentiometer,IC Socket,Relay,Connector.Our parts cover such applications as commercial,industrial, and automotives areas.

We are looking forward to setting up business relationship with you and hope to provide you with the best service and solution. Let us make a better world for our industry!

Contact us

Tel: +86-755-8981 8866 Fax: +86-755-8427 6832
Email & Skype: info@chipsmall.com Web: www.chipsmall.com
Address: A1208, Overseas Decoration Building, #122 Zhenhua RD., Futian, Shenzhen, China

版数 VER.	年月日 DATE	CN NO.	変更内容 DESCRIPTION	製図 DR.	担当 CHK.	査閲 APPD.	承認 APPD.

図面番号(DRAWING NO.) SJ117219

WISDOM承認 2016/01/22

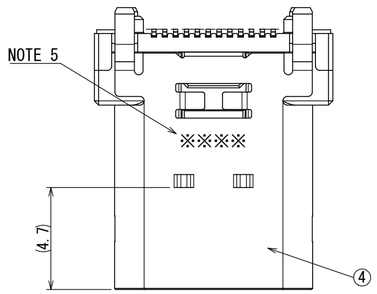

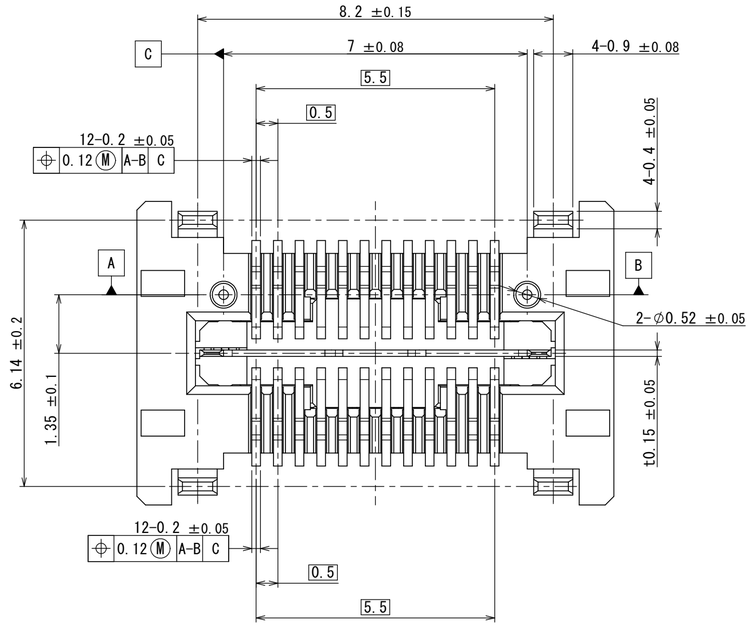

A
(10 : 1)

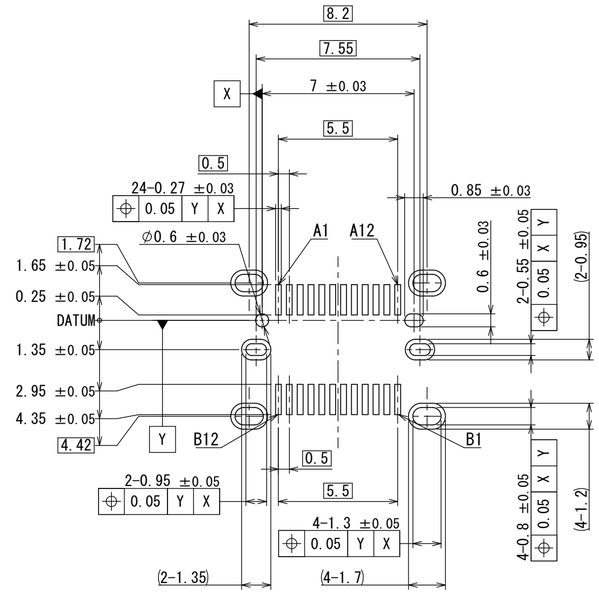

APPLICABLE P.C.B DIMENSION (REF.)
適合基板寸法 (参考)

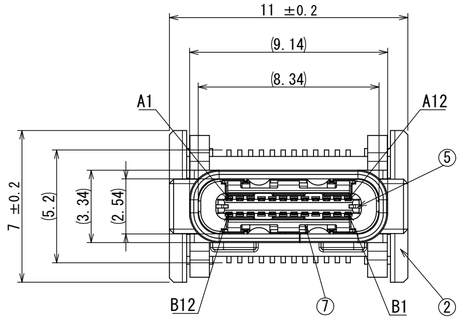

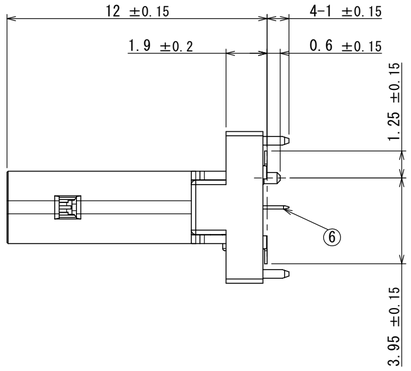

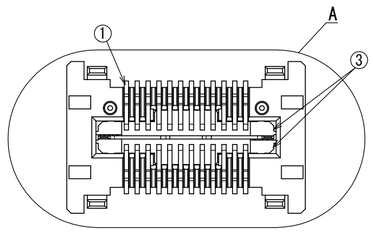

NOTE 1. COPLANARITY OF SMT TERMINAL SHALL BE 0.1 MAXIMUM.
NOTE 2. MATING DIMENSIONS CONSIST OF
"Universal Serial Bus Type-C Cable and Connector Specification Revision 1.1"
NOTE 3. THE SHELL LENGTH IS LESS THAN THE MINIMUM SPECIFIED BY THE USB TYPE C STANDARD.
AS SUCH IT CANNOT INDEPENDENTLY BE GURANTEED TO MEET ALL TYPE C MECHANICAL REQUIREMENTS.
REFERENCE THE USB TYPE C SPECIFICATION RELEASE 1.1, SECTION 3.2.1, NOTE 7.
NOTE 4. VACUUM AREA.
NOTE 5. LOT NO. IS MARKED AS SHOWN IN BELOW FIGURE MARKING.
(EX.) 5 Y 0 3
-5 :MANUFACTURE YEAR. (LAST 1 DIGIT OF A.D.)
-Y :MANUFACTURE MONTH. (JAN. TO SEP.:1 TO 9, OCT.:O, NOV.:X, DEC.:Y)
-03:MANUFACTURE DAY. (1 TO 31)

TABLE1. PIN ASSIGNMENT (FRONT VIEW)

Pin No.	A1	A2	A3	A4	A5	A6	A7	A8	A9	A10	A11	A12
	GND	TX1+	TX1-	V_{BUS}	CC1	D+	D-	SBU1	V_{BUS}	RX2-	RX2+	GND
	GND	RX1+	RX1-	V_{BUS}	SBU2	D-	D+	CC2	V_{BUS}	TX2-	TX2+	GND
Pin No.	B12	B11	B10	B9	B8	B7	B6	B5	B4	B3	B2	B1

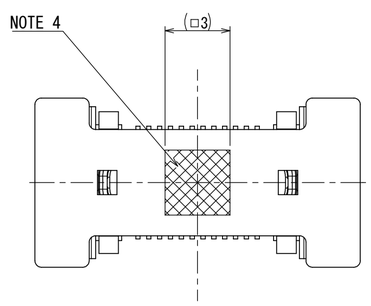

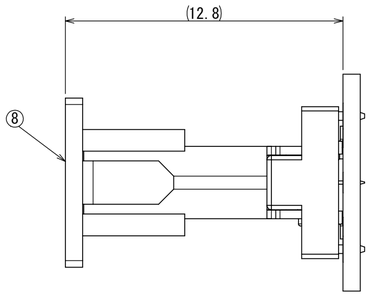

CAP ASSEMBLY AND MOUTING CONDITION (REF.)
(5 : 1)

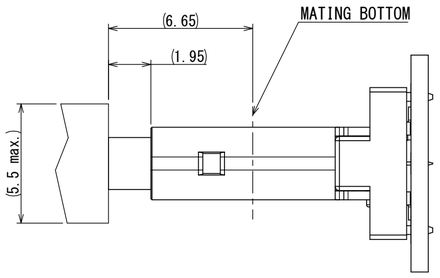

MATED CONDITION (REF.)
(2 : 1)

符号 NO.	名称 DESCRIPTION	個数 QTY.	材料 MATERIAL	仕上 FINISH	備考 REMARKS
8	CAP	1	THERMOPLASTIC RESIN	COLOR:BLACK	
7	GND PLATE	2	STAINLESS STEEL	NICKEL PLATING	
6	MID PLATE 2	1	STAINLESS STEEL	NICKEL PLATING	
5	MID PLATE 1	1	STAINLESS STEEL	NICKEL PLATING	
4	SHELL	1	STAINLESS STEEL	NICKEL PLATING	
3	INSULATOR 2	2	THERMOPLASTIC RESIN	COLOR:BLACK	
2	INSULATOR 1	1	THERMOPLASTIC RESIN	COLOR:BLACK	
1	CONTACT	24	COPPER ALLOY	CONTACT AREA NICKEL:2μm MIN. PALLADIUM-NICKEL:0.75μm MIN. GOLD FLASH:0.05μm MIN. SOLDER TAILS: NICKEL:2μm MIN. GOLD FLASH:0.03μm MIN.	

仕様書(SPECIFICATION) JACS-30368※

第1版(ORIGINAL DATE) 20/JAN/2016

製図 DR.

担当 CHK. S. YAMAGUCHI

査閲 APPD. M. SASAKI

承認 APPD. T. MASUMOTO

一般公差(GENERAL TOLERANCE)

寸法(DIMENSION): . ±0.8 / .X ±0.4 / .XX ±0.1 / .XXX ±

角度(ANGLES): X° ± / X°X' ±

単位(UNIT) : mm

尺度(SCALE) 5:1

シリーズ(SERIES) DX07

名称(TITLE) DX07S024WJ1

質量(MASS)

日本航空電子工業株式会社
JAPAN AVIATION ELECTRONICS INDUSTRY, LTD.

図面番号(DRAWING NO.) SJ117219

SIZE A2

版数(VER.) 1

JAE-CONNECTOR.COM
Reference only

JAE Connector DIV. Proprietary.Copyright(C) 2016, Japan Aviation Electronics Industry, LTD.

DCF-C-213H(12.08)

S/W