Chipsmall Limited consists of a professional team with an average of over 10 year of expertise in the distribution of electronic components. Based in Hongkong, we have already established firm and mutual-benefit business relationships with customers from,Europe,America and south Asia,supplying obsolete and hard-to-find components to meet their specific needs.

With the principle of “Quality Parts,Customers Priority,Honest Operation,and Considerate Service”,our business mainly focus on the distribution of electronic components. Line cards we deal with include Microchip,ALPS,ROHM,Xilinx,Pulse,ON,Everlight and Freescale. Main products comprise IC,Modules,Potentiometer,IC Socket,Relay,Connector.Our parts cover such applications as commercial,industrial, and automotives areas.

We are looking forward to setting up business relationship with you and hope to provide you with the best service and solution. Let us make a better world for our industry!

Contact us

Tel: +86-755-8981 8866 Fax: +86-755-8427 6832
Email & Skype: info@chipsmall.com Web: www.chipsmall.com
Address: A1208, Overseas Decoration Building, #122 Zhenhua RD., Futian, Shenzhen, China

PART NAME	SERIES 2000 UPRIGHT CABINET RACK	PART No.	E-2000 TO E-2015	REV. DATE	1-2-02

FINISH:
FRAME ASSEMBLY, SIDES, DOOR & TOP COVER ____ GRAY TEXTURE OR ROYAL BLUE TEXTURE
PANEL MOUNTING RAILS ____ SMOOTH BLACK
FRONT TOP TRIM ____ METALLIC GRAY

MATERIAL:
PANEL MOUNTING RAILS ____ 12 GA. STEEL
FRAME TOP, BASE ASSEMBLY, FILLERS & VERTICAL RAILS ____ 14 GA. STEEL
RAIL SUPPORTS ____ 16 GA. STEEL
TOP COVER & SIDES ____ 18 GA. STEEL
DOOR & FRONT TOP TRIM ____ 20 GA. STEEL

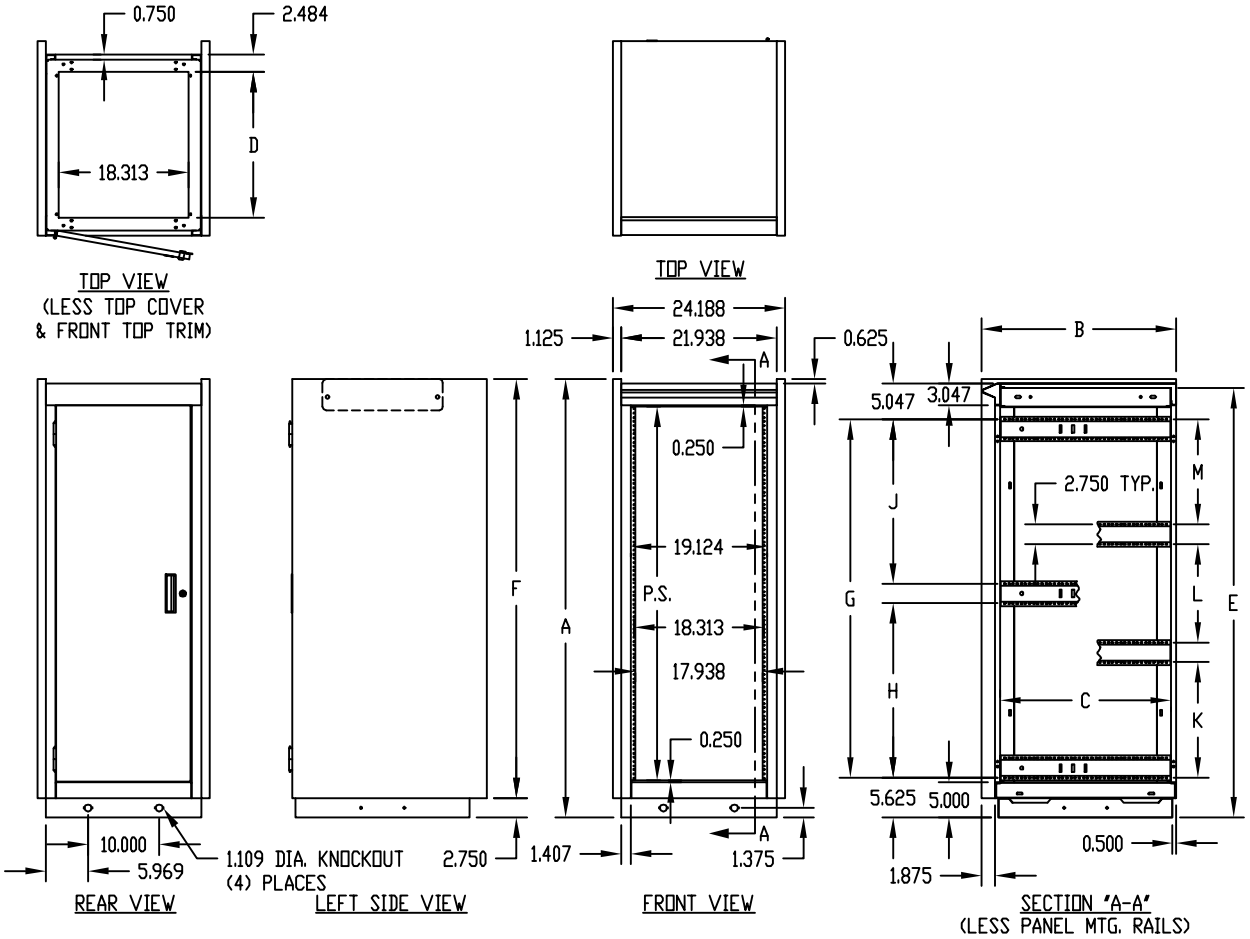

PANEL MOUNTING RAILS (FRONT & REAR) ARE TAPPED #10-32 ON E.I.A. UNIVERSAL SPACING AND ARE FULLY ADJUSTABLE.

BOTTOM PIERCED FOR MOUNTING RC-7758 CASTERS.

LOAD RATING: 1200 LBS. MAX.

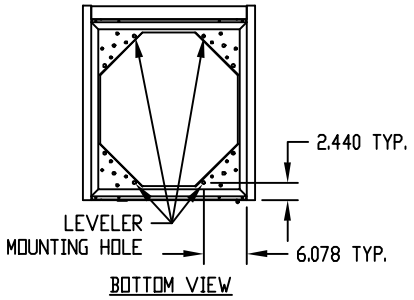

* DISCONTINUED

PART No.	P.S.	A	B	C	D	E	F	G	H	J	K	L	M
E-2000	21.000	30.250	23.875	20.500	17.000	29.000	27.500	18.937	—	—	—	—	—
* E-2001	31.500	40.750				39.500	38.000	29.437	—	—	—	—	—
* E-2002	35.000	44.250				43.000	41.500	32.937	—	—	—	—	—
E-2003	42.000	51.250				50.000	48.500	—	19.281	17.906	—	—	—
E-2004	52.500	61.750				60.500	59.000	—	24.531	23.156	—	—	—
E-2005	61.250	70.500				69.250	67.750	—	28.906	27.531	—	—	—
E-2006	70.000	79.250				78.000	76.500	—	33.281	31.906	—	—	—
E-2007	78.750	88.000	23.875	20.500	17.000	86.750	85.250	—	—	—	25.125	22.312	23.750
E-2008	21.000	30.250	27.375	24.000	20.500	29.000	27.500	18.937	—	—	—	—	—
* E-2009	31.500	40.750				39.500	38.000	29.437	—	—	—	—	—
* E-2010	35.000	44.250				43.000	41.500	32.937	—	—	—	—	—
E-2011	42.000	51.250				50.000	48.500	—	19.281	17.906	—	—	—
E-2012	52.500	61.750				60.500	59.000	—	24.531	23.156	—	—	—
E-2013	61.250	70.500				69.250	67.750	—	28.906	27.531	—	—	—
E-2014	70.000	79.250				78.000	76.500	—	33.281	31.906	—	—	—
E-2015	78.750	88.000	27.375	24.000	20.500	86.750	85.250	—	—	—	25.125	22.312	23.750