Chipsmall Limited consists of a professional team with an average of over 10 year of expertise in the distribution of electronic components. Based in Hongkong, we have already established firm and mutual-benefit business relationships with customers from,Europe,America and south Asia,supplying obsolete and hard-to-find components to meet their specific needs.

With the principle of “Quality Parts,Customers Priority,Honest Operation,and Considerate Service”,our business mainly focus on the distribution of electronic components. Line cards we deal with include Microchip,ALPS,ROHM,Xilinx,Pulse,ON,Everlight and Freescale. Main products comprise IC,Modules,Potentiometer,IC Socket,Relay,Connector.Our parts cover such applications as commercial,industrial, and automotives areas.

We are looking forward to setting up business relationship with you and hope to provide you with the best service and solution. Let us make a better world for our industry!

Contact us

Tel: +86-755-8981 8866 Fax: +86-755-8427 6832
Email & Skype: info@chipsmall.com Web: www.chipsmall.com
Address: A1208, Overseas Decoration Building, #122 Zhenhua RD., Futian, Shenzhen, China

REVISION RECORD		
REV	DESCRIPTION	DRFT

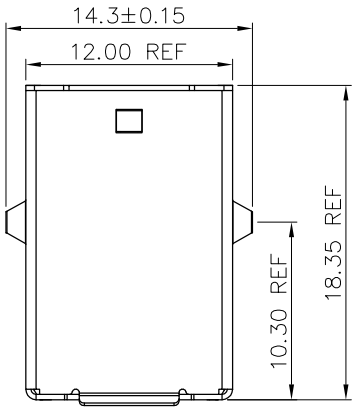

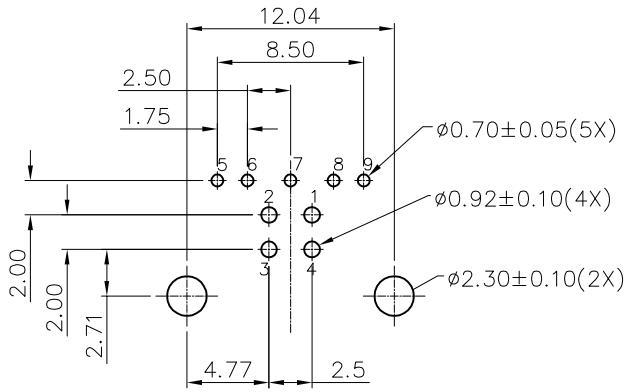

RECOMMENDED PCB LAYOUT
TOP VIEW(TOLERANCE: ±0.05)

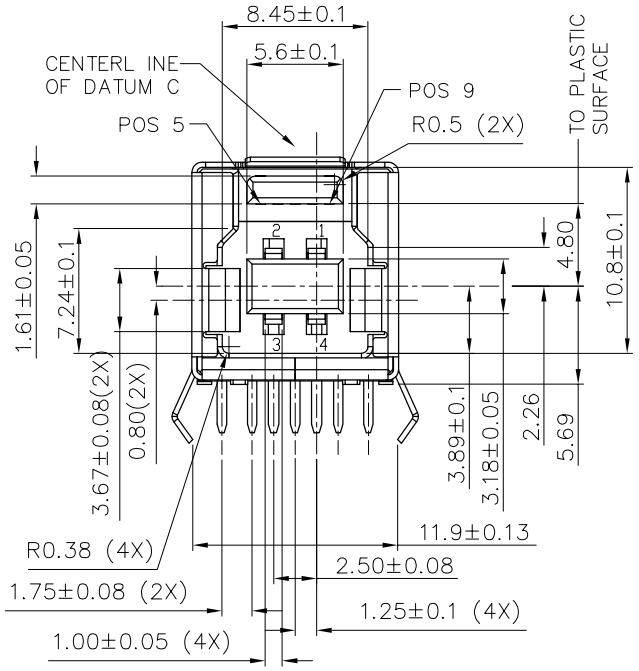

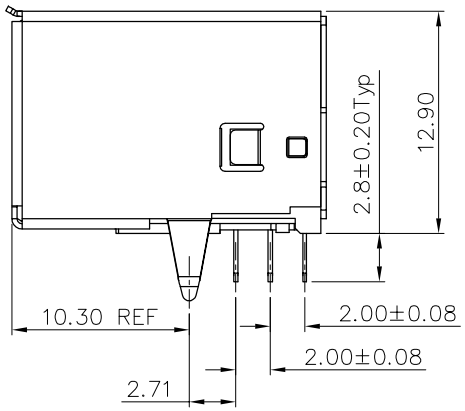

NOTES:
1.MATERIAL
1.1 PLASTIC: NYLON UL 94V-0 COLOR: BLUE300C;
1.2 SHIELD: STEEL
PLATING: FRONT SHIELD PLATING NiCKEL 50u"Min;
REAR SHIELD PLATING NiCKEL 80u"
50u"MIN CU UNDERPALTING ALL OVER .
1.3 TERMINAL: PHOSPHOR BRONZE
PLATING: 3u" Min GOLD PLATING ON CONTACT AREA
80u"MIN TIN PALTING ON SOLDER AREA.
AND 50u"MIN NICKEL UNDERPALTING OVER ALL.
2. ELECTRICAL CHARACTERISTICS
2.1 CURRENT RATING: 1.8A
2.2 CONTACT RESISTANCE: 30m ΩMAX.
2.3 DIELECTIC WITHSTANDING: 100V AC/1min.
2.4 INSULATION RESISTANCE: 100M ΩMin.
3. MECHANICAL CHARACTERISTICS
3.1 MATING FORCE: 3.57Kgf MAX(35N MAX).
3.2 UNMATING FORCE: 1.02Kgf Min(10N Min).
3.3 DURABILITY: 5000 CYCLES.
OPERATION TEMPERATURE:-20°c to +80°c

MM (INCH)	DFTD Roy	DATE 11/20/2012	Pulse Electronics — RoHS Compliant
TOLERANCES EXCEPT AS NOTED	CHKD	DATE	
MM: .0 ± 0.38, .00 ± 0.13, .000 ± 0.05	APPVL	DATE	TITLE USB 3.0 B TYPE RECEPTACLE
	MATERIAL :		
ANGLES: X.° ±2°, X.X° ±0.5°	QT'Y :		DRAWING NO. E8199-030-01 — SIZE A3 — REV 01
THIRD ANGLE PROJECTION	FINISH :		/PART NO. E8199-030-01
DETACHED LISTS	SCALE : 1:1		DO NOT SCALE DRAWING — SHEET 1 OF 1