Chipsmall Limited consists of a professional team with an average of over 10 year of expertise in the distribution of electronic components. Based in Hongkong, we have already established firm and mutual-benefit business relationships with customers from,Europe,America and south Asia,supplying obsolete and hard-to-find components to meet their specific needs.

With the principle of “Quality Parts,Customers Priority,Honest Operation,and Considerate Service”,our business mainly focus on the distribution of electronic components. Line cards we deal with include Microchip,ALPS,ROHM,Xilinx,Pulse,ON,Everlight and Freescale. Main products comprise IC,Modules,Potentiometer,IC Socket,Relay,Connector.Our parts cover such applications as commercial,industrial, and automotives areas.

We are looking forward to setting up business relationship with you and hope to provide you with the best service and solution. Let us make a better world for our industry!

Contact us

Tel: +86-755-8981 8866 Fax: +86-755-8427 6832
Email & Skype: info@chipsmall.com Web: www.chipsmall.com
Address: A1208, Overseas Decoration Building, #122 Zhenhua RD., Futian, Shenzhen, China

THIS COPY IS PROVIDED ON A RESTRICTED BASIS AND IS NOT TO BE USED IN ANY WAY DETRIMENTAL TO THE INTERESTS OF PANDUIT CORP.

PANDUIT PART #	WIRE RANGE AWG [mm²]	TAB SIZE INCH [mm]	DIMENSIONS in. [mm]	
			L± .03 [0,8]	W± .01 [0,3]
ED10-250M	#12-10 [4,0-6,0]	.250 X .032 [6,3 X 0,8]	.72 [18,3]	.25 [6,3]

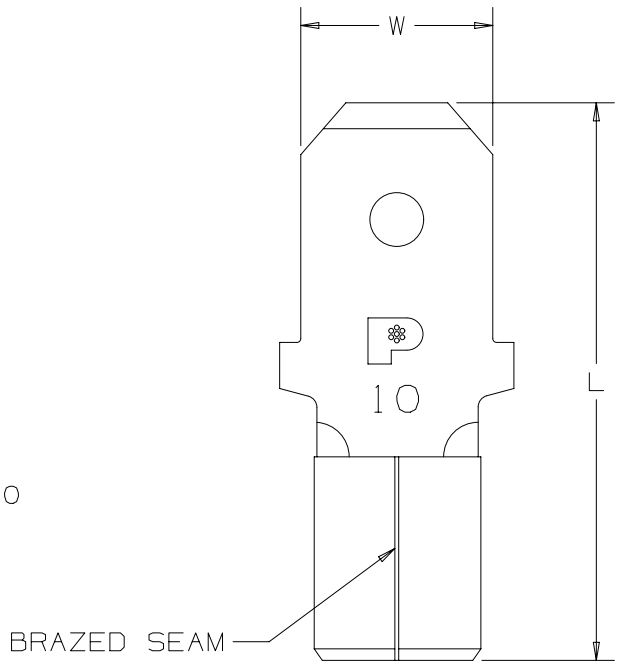

NOTES:

1. USED FOR:
   A. STRANDED COPPER WIRE ONLY
   B. 302°F [150°C] MAX OPERATING TEMPERATURE
   C. 2000V MAX VOLTAGE

2. MATERIAL:
   A. STAMPING: .032" (.81) THICK NICKEL PLATED COPPER

3. INSTALLATION TOOLS: CT-100A, CT-200, CT-260, CT-570, CT-1570

4. WIRE STRIP LENGTH: 9/32" $^{+1/32}_{-0}$ [7,1mm $^{+0,8}_{-0}$]

5. SEE WWW.PANDUIT.COM FOR PACKAGE QUANTITIES INDICATED BY PART NUMBER SUFFIX

6. DIMENSIONS IN BRACKETS ARE METRIC EQUIVALENT

REV	DATE	BY	CHK	APR	DESCRIPTION	ECN
00	2/18	JHNU	TMR	RGB	RELEASED	00123SH

STRONGHOLD MALE DISCONNECT (250 SERIES) NON-INSULATED, BRAZED SEAM #12-10 AWG

CUSTOMER DRAWING

ITEM REVISION NAME: 00123SHW/00

DATASET FILE NAME: 00123SHW/00

UNLESS OTHERWISE SPECIFIED, DIMENSIONAL TOLERANCES ARE: IN [mm]

.X ± .1 [2.54] .XXX ± .005 [.127]
.XX ± .01 [.25] ANGLES ± 5 °

THIRD ANGLE PROJECTION

MATERIAL: SEE NOTES

DRAWING NUMBER: SH41546

DRAWN BY	DATE	CHK	SCALE	SHT	SIZE
JHNU	2/18	TMR	NTS	SHT 1 OF 1	A

D10100DA/20