Chipsmall Limited consists of a professional team with an average of over 10 year of expertise in the distribution of electronic components. Based in Hongkong, we have already established firm and mutual-benefit business relationships with customers from,Europe,America and south Asia,supplying obsolete and hard-to-find components to meet their specific needs.

With the principle of “Quality Parts,Customers Priority,Honest Operation,and Considerate Service”,our business mainly focus on the distribution of electronic components. Line cards we deal with include Microchip,ALPS,ROHM,Xilinx,Pulse,ON,Everlight and Freescale. Main products comprise IC,Modules,Potentiometer,IC Socket,Relay,Connector.Our parts cover such applications as commercial,industrial, and automotives areas.

We are looking forward to setting up business relationship with you and hope to provide you with the best service and solution. Let us make a better world for our industry!

Contact us

Tel: +86-755-8981 8866 Fax: +86-755-8427 6832
Email & Skype: info@chipsmall.com Web: www.chipsmall.com
Address: A1208, Overseas Decoration Building, #122 Zhenhua RD., Futian, Shenzhen, China

THIS COPY IS PROVIDED ON A RESTRICTED BASIS AND IS NOT TO BE USED IN ANY WAY DETRIMENTAL TO THE INTERESTS OF PANDUIT CORP.

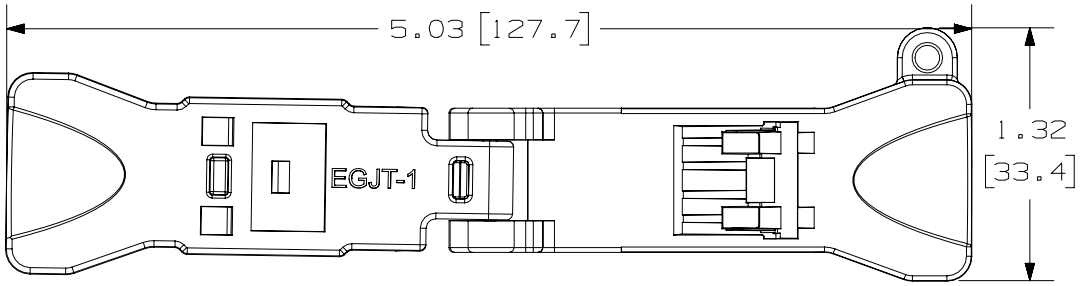

NOTES:
1. VISIT OUR ON-LINE CATALOG AT WWW.PANDUIT.COM FOR A LIST OF CURRENT PARTS APPLICABLE FOR USE WITH THIS PRODUCT.
2. DIMENSIONS IN [ ] ARE METRIC.
3. ALL MATERIALS AND COMPONENTS USED MEET THE MATERIAL RESTRICTIONS OF RoHS (EUROPEAN DIRECTIVE 2011/65/EU ON THE RESTRICTION OF HAZARDOUS SUBSTANCES) AS PROPOSED BY THE RoHS TECHNICAL ADAPTATION COMMITEE.
4. WEIGHT: .29 LB/10 PCS (131.6 g/10 PCS)
5. MATERIAL: GLASS FILLED NYLON

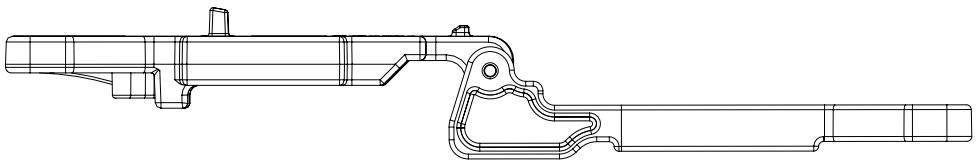

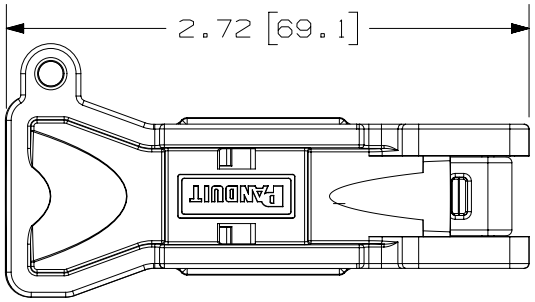

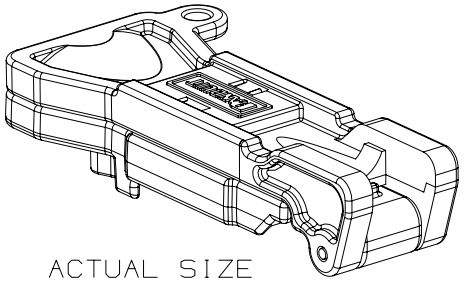

ACTUAL SIZE
(FOLDED)

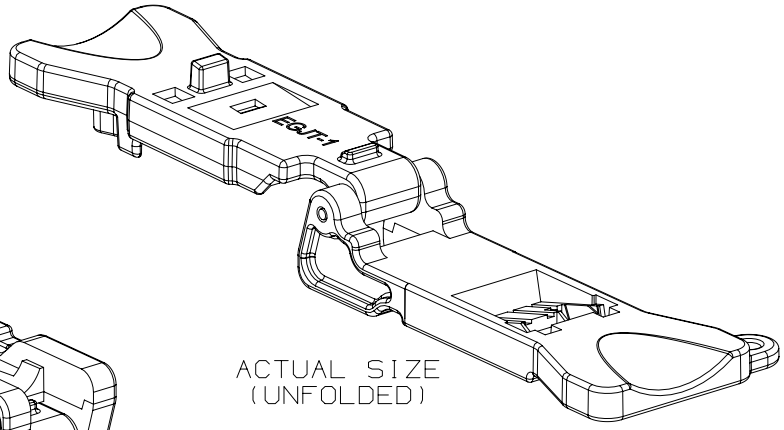

ACTUAL SIZE
(UNFOLDED)

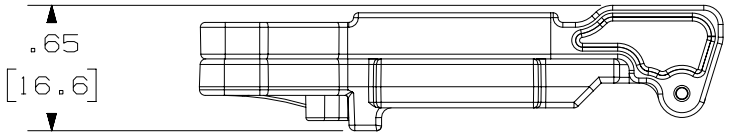

REV	DATE	BY	CHK	APR	DESCRIPTION	ECN
08A	2-28-18	BJN	DCS	TMBA	UPDATED REVISED & REDRAWN PREVIOUS REVISIONS REMVD FOR CLARITY	00068SKC-02

A-SIZE CUSTOMER

PART NUMBER: EGJT-1

TITLE: TG TERMINATION TOOL

CUSTOMER DRAWING

ITEM REVISION NAME: 00068SKC/08

DATASET FILE NAME: 00068SKC_DC02/08A

THIRD ANGLE PROJECTION

PANDUIT

REVIEW DRAWING NUMBERS: 00068SKA-01, 00068SKB-01, 00068SKC-01, 02436-04

DRAWING NUMBER: 00068SKC-02

DRAWN BY	DATE	CHK	SCALE	SHEET 1 OF 1	SIZE
BJN	12-15-16	DCS	FULL		A