Chipsmall Limited consists of a professional team with an average of over 10 year of expertise in the distribution of electronic components. Based in Hongkong, we have already established firm and mutual-benefit business relationships with customers from,Europe,America and south Asia,supplying obsolete and hard-to-find components to meet their specific needs.

With the principle of “Quality Parts,Customers Priority,Honest Operation,and Considerate Service”,our business mainly focus on the distribution of electronic components. Line cards we deal with include Microchip,ALPS,ROHM,Xilinx,Pulse,ON,Everlight and Freescale. Main products comprise IC,Modules,Potentiometer,IC Socket,Relay,Connector.Our parts cover such applications as commercial,industrial, and automotives areas.

We are looking forward to setting up business relationship with you and hope to provide you with the best service and solution. Let us make a better world for our industry!

Contact us

Tel: +86-755-8981 8866 Fax: +86-755-8427 6832
Email & Skype: info@chipsmall.com Web: www.chipsmall.com
Address: A1208, Overseas Decoration Building, #122 Zhenhua RD., Futian, Shenzhen, China

最大実体公差 MAXIMUM MATERIAL PRINCIPLE	全振れ TOTAL RUN-OUT	円周振れ CIRCULAR RUN-OUT	対称度 SYMMETRY	同軸度 CONCENTRICITY	位置度 POSITION	傾斜度 ANGULARITY	直角度 PERPENDICULARITY	平行度 PARALLELISM	面の輪郭度 PROFILE OF ANY SURFACE	線の輪郭度 PROFILE OF ANY LINE	円筒度 CYLINDRICITY	真円度 CIRCULARITY	平面度 FLATNESS	真直度 STRAIGHTNESS

③ cULus Recognized Component

図面番号(DRAWING NO.) SJ110395

版数 VER.	年月日 DATE	CN NO.	変更内容 DESCRIPTION	製図 DR.	担当 CHK.	査閲 APPD.	承認 APPD.
3	19/APR/2013	006075	REVISED COMMENT etc.	—	H.KANNO	—	T.KUDOU

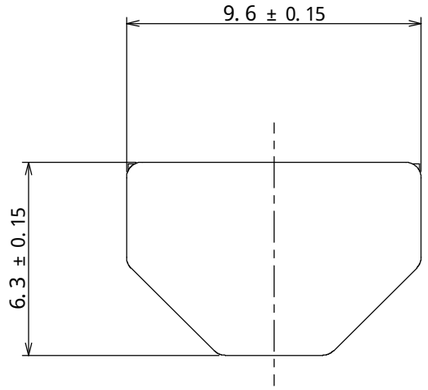

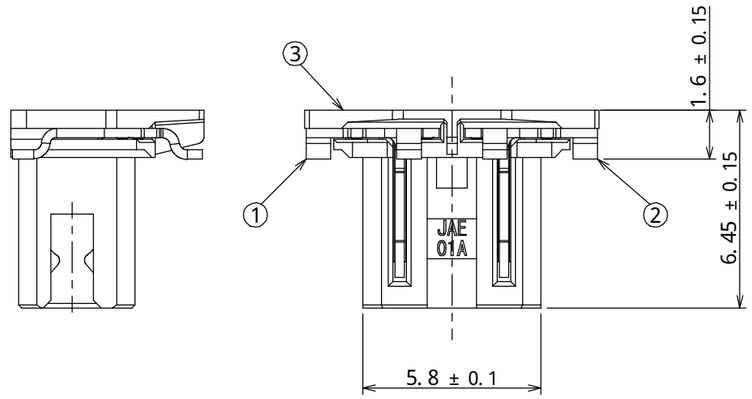

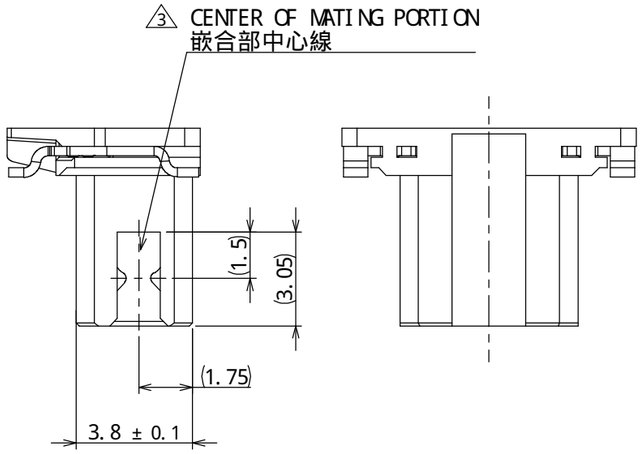

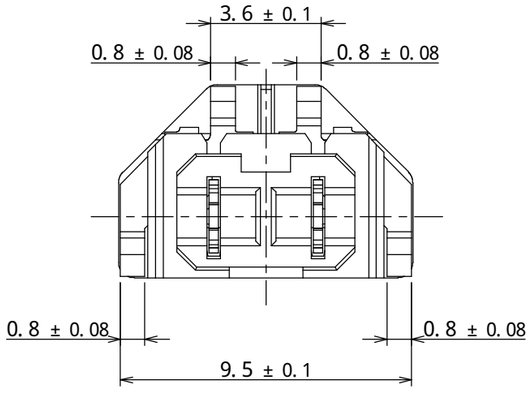

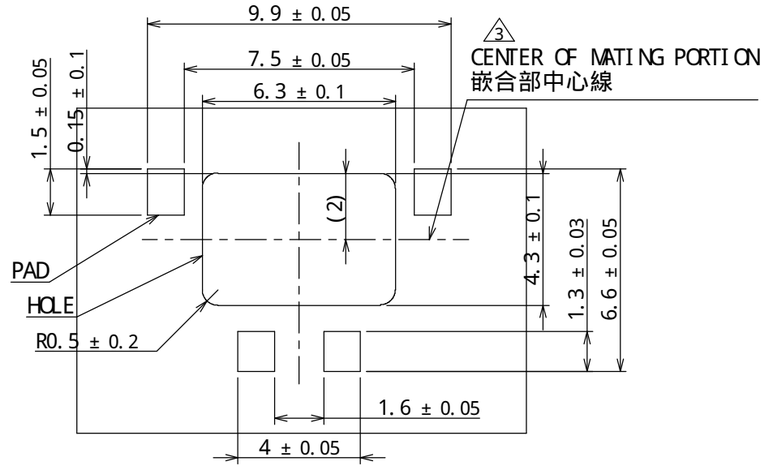

③ APPLICABLE P.C.B DIMENSION(FOR MOUNTING)(REF.)
適合基板寸法(実装側)(参考)

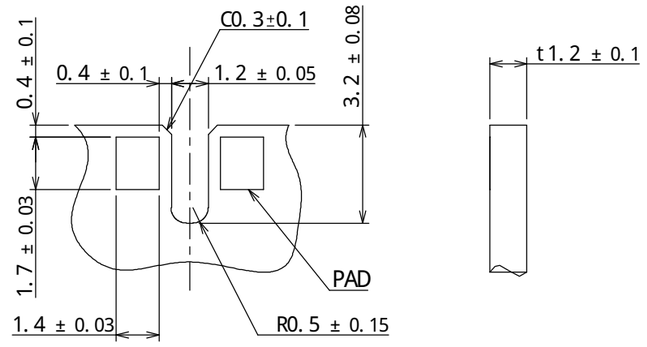

③ APPLICABLE P.C.B DIMENSION(FOR MATING)(REF.)
適合基板寸法(嵌合側)(参考)

③ (錫または錫合金めっき)
(TIN/TIN ALLOY PLATING)

符号 NO.	名称 DESCRIPTION	個数 QTY.	材料 MATERIAL	仕上 FINISH	備考 REMARKS
3	INSULATOR インシュレータ	1	LCP		COLOR: WHITE
2	CONTCT-R コンタクト-R	1	COPPER ALLOY 銅合金	LEAD-FREE/TIN PLATING	
1	CONTCT-L コンタクト-L	1	COPPER ALLOY 銅合金	LEAD-FREE/TIN PLATING	

特に指定のない限り、鋭い角やかえりは除去すること。
SHARP EDGES AND BURRS SHOULD BE ELIMINATEDEXCEPT FOR SPECIAL REQUESTS.

一般公差(GENERAL TOLERANCE)
寸法(DIMENSION): ・ ± / ・× ± / ・×× ± / ・××× ±
角度(ANGLES): ×° ± / ×°×′ ±

単位(UNIT): mm

仕様書(SPECIFICATION)	JACS-10669/JAHL-10669
組立図番(A'SSY DWG.NO.)	
材料(MATERIAL)	
仕上(FINISH)	
処理(TREATMENT)	
第1版(ORIGINAL DATE)	13/JAN/2010
製図 DR.	—
担当 CHK.	K.SHIMOJI
査閲 APPD.	T.KUDOU
承認 APPD.	K.IBARAKI
品保 Q.A.	
生産技術 (PRO ENG.)	
尺度(SCALE)	5:1
シリーズ(SERIES)	ES3
名称(TITLE)	ES3B002WF1
質量(MASS)	
表面積(SURFACE)	

日本航空電子工業株式会社
JAPAN AVIATION ELECTRONICS INDUSTRY, LTD.

図面番号(DRAWING NO.) SJ110395

SIZE A3

版数(VER.) 3

S/W

CONFIDENTIAL JAE Connector DIV. Proprietary.Copyright(C) 2010, Japan Aviation Electronics Industry, LTD.Confidential.

JAE-CONNECTOR.COM Reference only

WISDOM承認 2013/06/27

DCF-C-220H(12.08)