Chipsmall Limited consists of a professional team with an average of over 10 year of expertise in the distribution of electronic components. Based in Hongkong, we have already established firm and mutual-benefit business relationships with customers from,Europe,America and south Asia,supplying obsolete and hard-to-find components to meet their specific needs.

With the principle of “Quality Parts,Customers Priority,Honest Operation,and Considerate Service”,our business mainly focus on the distribution of electronic components. Line cards we deal with include Microchip,ALPS,ROHM,Xilinx,Pulse,ON,Everlight and Freescale. Main products comprise IC,Modules,Potentiometer,IC Socket,Relay,Connector.Our parts cover such applications as commercial,industrial, and automotives areas.

We are looking forward to setting up business relationship with you and hope to provide you with the best service and solution. Let us make a better world for our industry!

Contact us

Tel: +86-755-8981 8866 Fax: +86-755-8427 6832
Email & Skype: info@chipsmall.com Web: www.chipsmall.com
Address: A1208, Overseas Decoration Building, #122 Zhenhua RD., Futian, Shenzhen, China

THIS COPY IS PROVIDED ON A RESTRICTED BASIS AND IS NOT TO BE USED IN ANY WAY DETRIMENTAL TO THE INTERESTS OF PANDUIT CORP.

PANDUIT PART #	STUD SIZE		DIMENSIONS in. [mm]					TOOLS
	ENGLISH	METRIC	L ± .03 [0,76]	W ± .01 [0,25]	C ± .02 [0,51]	M ± .03 [0,76]	H ± .01 [0,25]	
EV14-6FB	#6	M3	.84 [21,3]	.28 [7,11]	.19 [4,83]	.70 [17,8]	.15 [3,81]	CT-100A *CT-160 *CT-260 *CT-400 CT-600-A (CT-500CH) CT-600-A (CT-550CH) CT-1550 CT-1551 CT-2500 (CT-2550CH)
EV14-8FB	#8	M4	.90 [22,9]	.31 [7,87]	.23 [5,84]	.74 [18,8]	.17 [4,32]	
EV14-10FB	#10	M5	.92 [23,4]	.34 [8,64]	.24 [6,10]	.76 [19,3]	.20 [5,08]	

*PANDUIT APPROVED TOOL

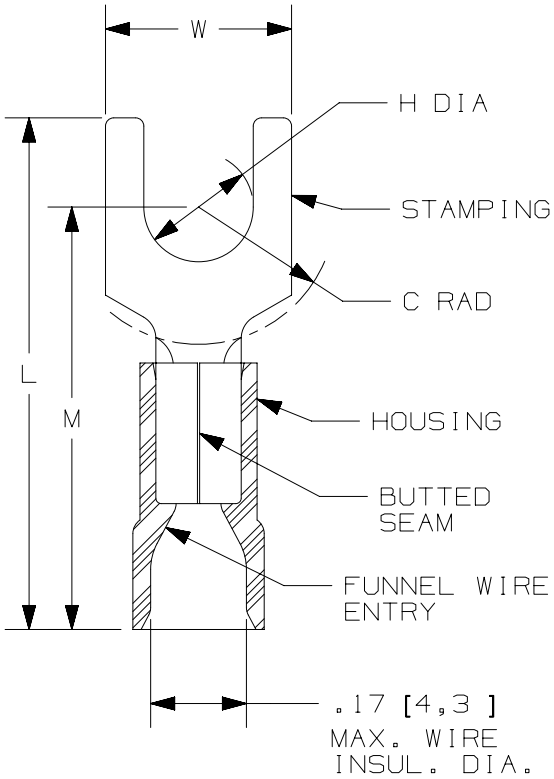

NOTES:

1. UL LISTED AND CSA CERTIFIED FOR:
   A. 16-14 AWG [1,5-2,5 mm²]
      SOLID OR STRANDED COPPER WIRE
   B. 221°F [105°C] MAX. OPERATING TEMPERATURE
   C. 600V. MAX. BLDG WIRE
      (1000 V. MAX. IN SIGNS, FIXTURES & LUMINAIRES)
2. MATERIAL:
   A. STAMPING: .03" [0,8] THK COPPER, TIN PLATED
   B. HOUSING: VINYL, BLUE
3. WIRE STRIP LENGTH: 5/16" $^{+1/32}_{-0}$ [7,9mm $^{+0,8}_{-0}$]
4. SEE www.panduit.com FOR PACKAGE QUANTITIES
5. DIMENSIONS IN BRACKETS ARE METRIC EQUIVALENT

LISTED 587H E52164

CERTIFIED LR31212

REV	DATE	BY	CHK	APR	DESCRIPTION	ECN
00	2/18	JHNU	TMR	RGB	RELEASED	00123SH

TITLE

STRONGHOLD FORK TERMINALS
VINYL INSULATED, BUTTED SEAM #16-14 AWG

CUSTOMER DRAWING

ITEM REVISION NAME: 00123SH0/00

DATASET FILE NAME: 00123SH0_DC/00

UNLESS OTHERWISE SPECIFIED, DIMENSIONAL TOLERANCES ARE: IN [mm]

.X ± .XXX ±

.XX ± ANGLES ±

THIRD ANGLE PROJECTION

MATERIAL: SEE NOTES

DRAWING NUMBER: SH41193

DRAWN BY	DATE	CHK	SCALE	SHEET	SIZE
JHNU	2/18	TMR	N.T.S.	SHEET 1 OF 1	A

D10100DA/12