Chipsmall Limited consists of a professional team with an average of over 10 year of expertise in the distribution of electronic components. Based in Hongkong, we have already established firm and mutual-benefit business relationships with customers from,Europe,America and south Asia,supplying obsolete and hard-to-find components to meet their specific needs.

With the principle of “Quality Parts,Customers Priority,Honest Operation,and Considerate Service”,our business mainly focus on the distribution of electronic components. Line cards we deal with include Microchip,ALPS,ROHM,Xilinx,Pulse,ON,Everlight and Freescale. Main products comprise IC,Modules,Potentiometer,IC Socket,Relay,Connector.Our parts cover such applications as commercial,industrial, and automotives areas.

We are looking forward to setting up business relationship with you and hope to provide you with the best service and solution. Let us make a better world for our industry!

Contact us

Tel: +86-755-8981 8866 Fax: +86-755-8427 6832
Email & Skype: info@chipsmall.com Web: www.chipsmall.com
Address: A1208, Overseas Decoration Building, #122 Zhenhua RD., Futian, Shenzhen, China

版数 REV.	年月日 DATE	DCN NO.	変更内容 DESCRIPTION	製図 DR.	担当 CHK.	査閲 APPD.	承認 APPD.
2	26.Mar.2004	054706	REDRAWN etc.		T.KUDOU	—	T.Morino

図面番号(DRAWING NO.) SJ036880

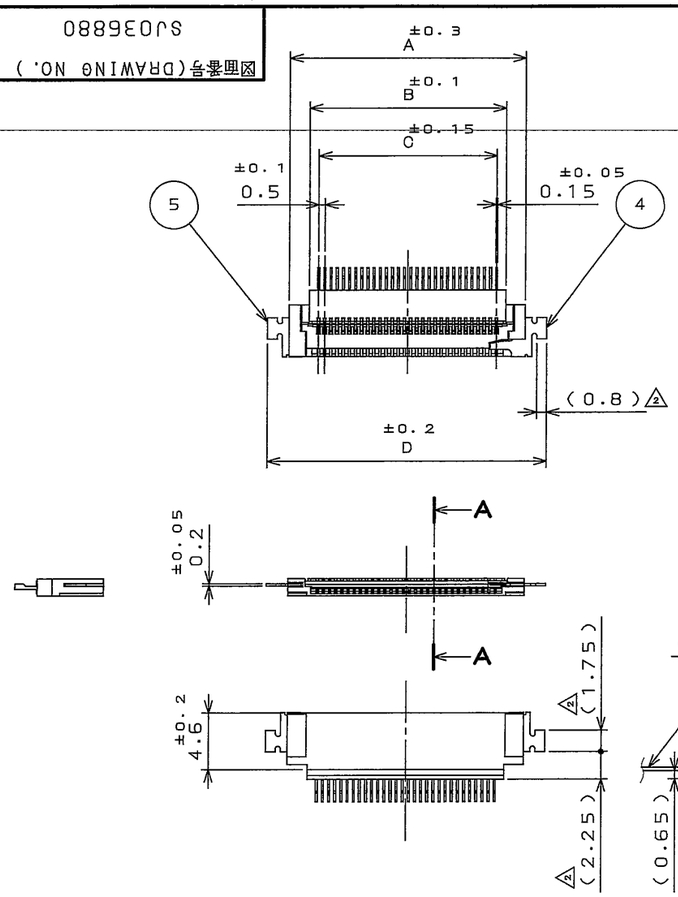

MATED CONDITION(REF.)
嵌合状態図(参考)

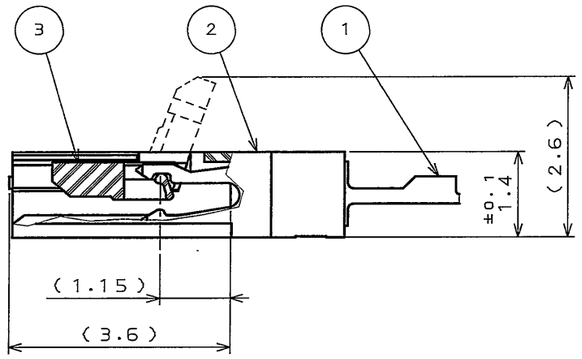

SECT. A-A
(SCALE 10:1)

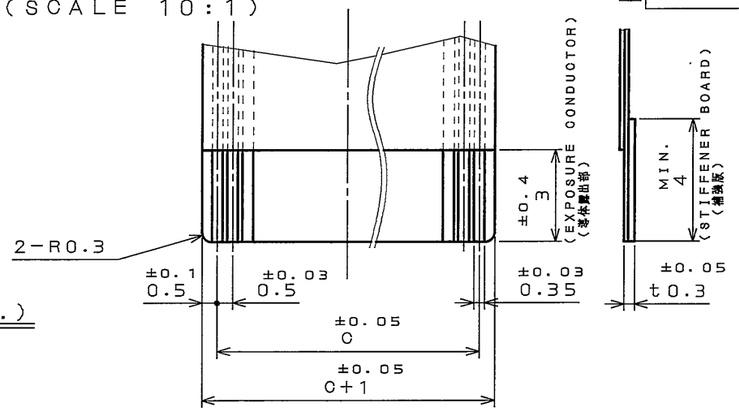

APPLICABLE F.P.C. DIMENSION(REF.)
適合FPC寸法(参考)

TABLE 1

	NO. OF CONTACT	A	B	C	D	E	F
	6	7.2	4.0	2.5	10.7	7.7	11.7
	8	8.2	5.0	3.5	11.7	8.7	12.7
	10	9.2	6.0	4.5	12.7	9.7	13.7
△2	16	12.2	9.0	7.5	15.7	12.7	16.7
	20	14.2	11.0	9.5	17.7	14.7	18.7
△2	30	19.2	16.0	14.5	22.7	19.7	23.7
△2	36	22.2	19.0	17.5	25.7	22.7	26.7
△2	40	24.2	21.0	19.5	27.7	24.7	28.7
△2	45	26.7	23.5	22.0	30.2	27.2	31.2
△2	50	29.2	26.0	24.5	32.7	29.7	33.7

TABLE 2

FINISH	CONTACT PART	TERMINAL PART
1	GOLD PLATING	LEAD-FREE TIN ALLOY PLATING

注1.仕上げは金メッキのこと。

△2 NOTE1.EXPOSURE CONDUCTORS SHOULD BE GIVEN GOLD PLATING.

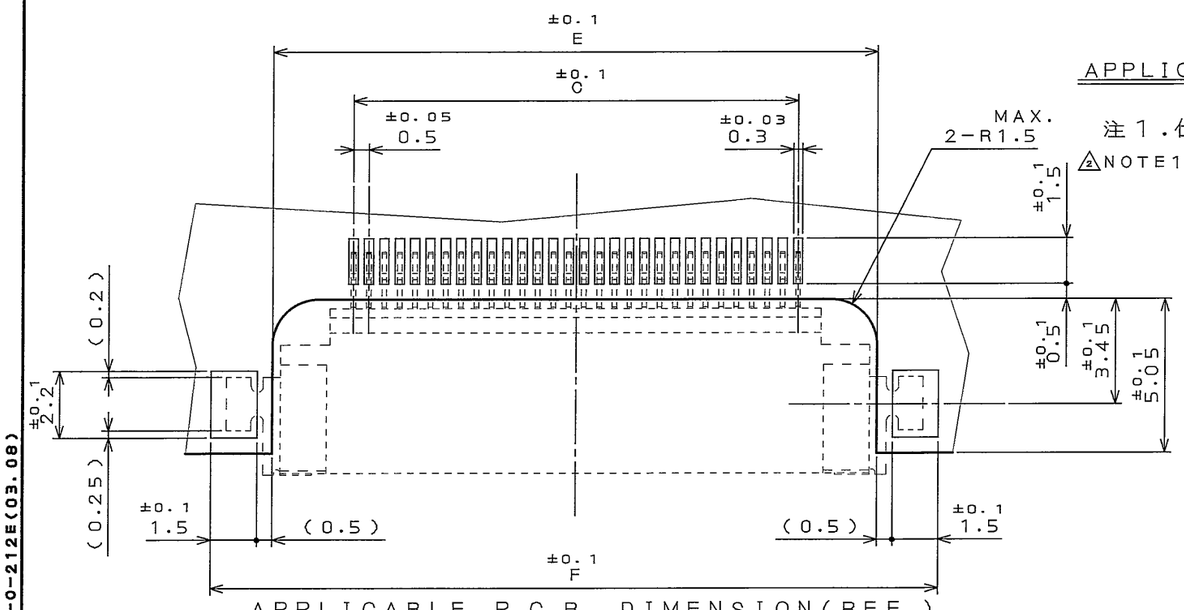

APPLICABLE P.C.B. DIMENSION(REF.)
適合基板寸法(参考)

符号 NO.	名称 DESCRIPTION	個数 QTY.	材料 MATERIAL	仕上 FINISH	備考 REMARKS
5	HOLD-DOWN-L	1	COPPER ALLOY	LEAD-FREE TIN ALLOY PLATING	
4	HOLD-DOWN-R	1	COPPER ALLOY	LEAD-FREE TIN ALLOY PLATING △2	
3	ACTUATOR	1	GLASS FILLED Ny		COLOR:WHITE UL94V-0
2	BASE INSULATOR	1	GLASS FILLED LCP		COLOR:BLACK UL94V-0
1	CONTACT	TABLE 1	COPPER ALLOY	TABLE 2	

仕様書(SPECIFICATION) JACS-1711 JAHL-1711

第1版(ORIGINAL DATE) 5.Jul.2002

製図 DR. K.HIROSE
担当 CHK. T.KUDOU
査閲 APPD. M.SUZUKI
承認 APPD. T.MORINO

一般公差(GENERAL TOLERANCE)

寸法(DIMENSION)		角度(ANGLES)
.	±0.8	X° ±
.X	±0.4	X°X'±
.XX	±0.1	
.XXX	±	

尺度(SCALE) 2:1 シリーズ(SERIES) FA5

名称(TITLE) FA5B***HP1

重量(WEIGHT)

JAE-CONNECTOR.COM
Reference Only

日本航空電子工業株式会社
JAPAN AVIATION ELECTRONICS INDUSTRY, LTD.

図面番号(DRAWING NO.) SJ036880

SIZE A3

版数(REV.) 2

LEAD FREE この製品は鉛フリー品です

JAE CONNECTOR DIV. PROPRIETARY.
COPYRIGHT (C) 2002, JAPAN AVIATION ELECTRONICS INDUSTRY, LTD.

DOF-0-212E(03.08)