Chipsmall Limited consists of a professional team with an average of over 10 year of expertise in the distribution of electronic components. Based in Hongkong, we have already established firm and mutual-benefit business relationships with customers from,Europe,America and south Asia,supplying obsolete and hard-to-find components to meet their specific needs.

With the principle of “Quality Parts,Customers Priority,Honest Operation,and Considerate Service”,our business mainly focus on the distribution of electronic components. Line cards we deal with include Microchip,ALPS,ROHM,Xilinx,Pulse,ON,Everlight and Freescale. Main products comprise IC,Modules,Potentiometer,IC Socket,Relay,Connector.Our parts cover such applications as commercial,industrial, and automotives areas.

We are looking forward to setting up business relationship with you and hope to provide you with the best service and solution. Let us make a better world for our industry!

Contact us

Tel: +86-755-8981 8866 Fax: +86-755-8427 6832
Email & Skype: info@chipsmall.com Web: www.chipsmall.com
Address: A1208, Overseas Decoration Building, #122 Zhenhua RD., Futian, Shenzhen, China

図面番号(DRAWING NO.) SJ111993

版数 VER.	年月日 DATE	CN NO.	変更内容 DESCRIPTION	製図 DR.	担当 CHK.	査閲 APPD.	承認 APPD.
2	9.Feb.2012	001757	ADD PARTS LIST (REDACTION MARK:1) △6		T.NEMOTO	———	M.KIKUCHI
3	15.May.2012	002737	ADDITION OF ITEMS (REDACTION MARK:1) △6		T.NEMOTO	———	M.KIKUCHI
4	26.Nov.2012	004606	ADDITION OF ITEMS (REDACTION MARK:1) △6		T.NEMOTO	———	M.KIKUCHI
5	13.Jun.2013	006639	ADDED NOTE (REDACTION MARK:4) △6		H.YOKOO	———	M.KIKUCHI
6	25.Apr.2014	009496	ADDITION OF ITEM (REDACTION MARK:5)		H.YOKOO	———	K.IBARAKI

WISDOM承認 2014/05/10

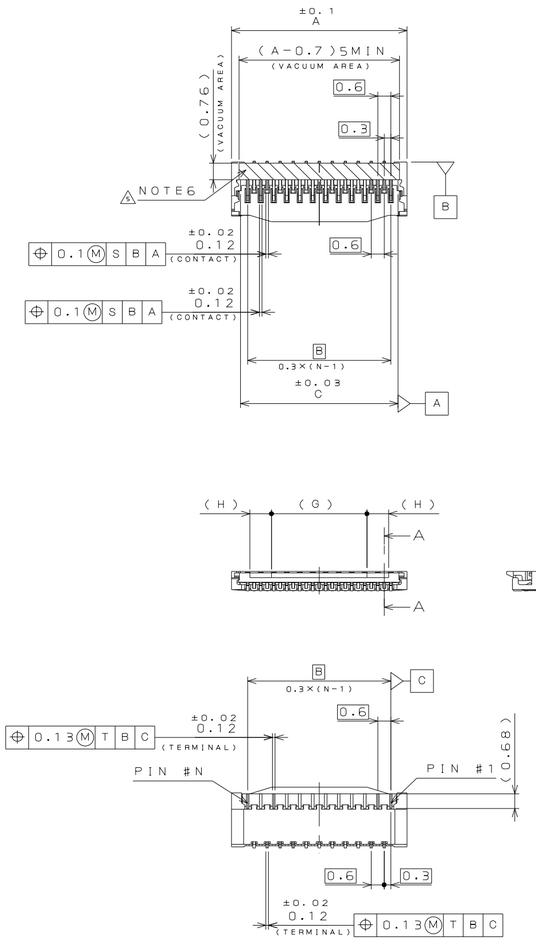

△6 NOTE 6. LOT NUMBER
注6. ロット構成

4X08A
- YEAR 年
- MONTH 月
- DAY 日
- MACHINE CODE 自動機番号

FPC WITH "wings"

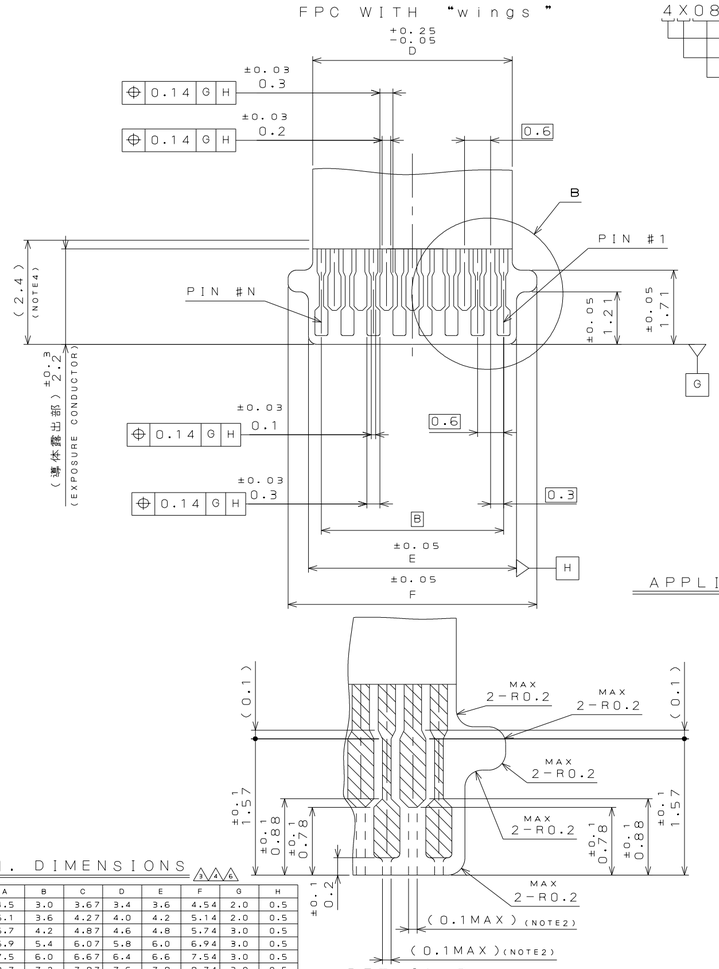

FPC WITHOUT "wings"

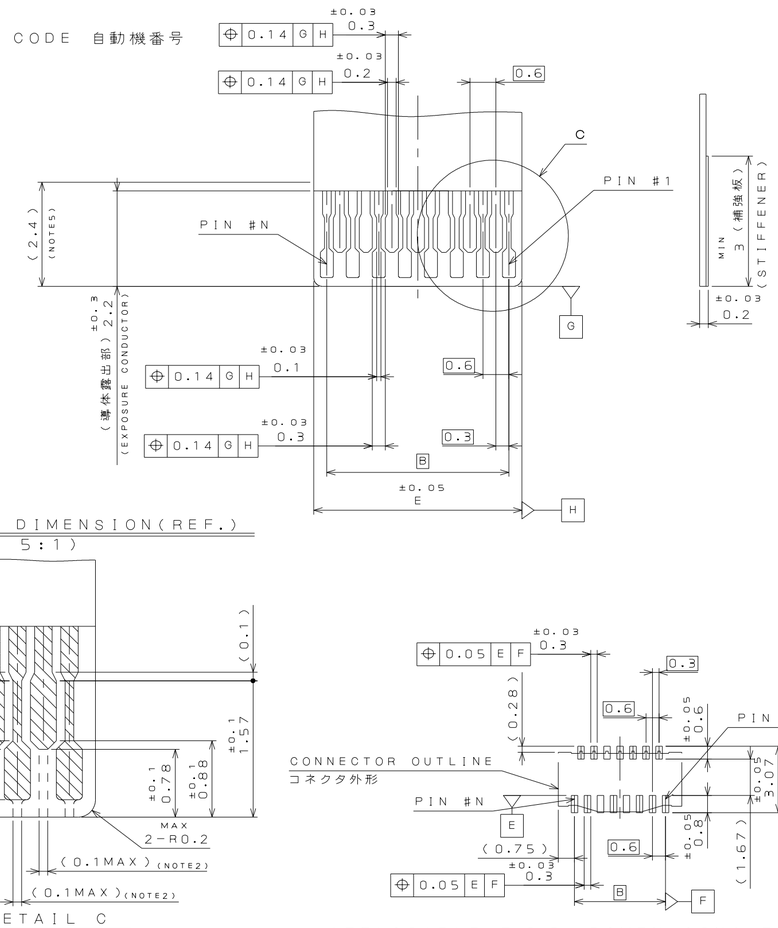

APPLICABLE F.P.C. DIMENSION(REF.)
(SCALE 5:1)

DETAIL B
(SCALE 20:1)

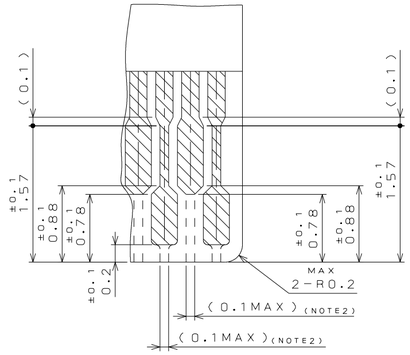

DETAIL C
(SCALE 20:1)

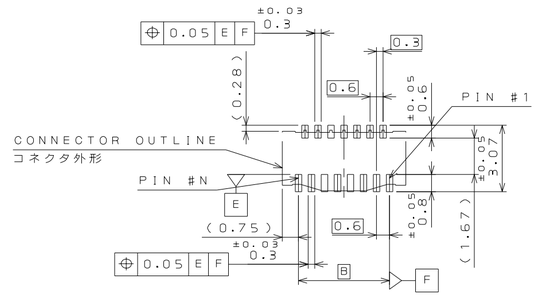

APPLICABLE P.C.B. DIMENSION(REF.)
(SCALE 5:1)

TABLE 1. DIMENSIONS △4△5△6

PRODUCT NO.	A	B	C	D	E	F	G	H
FB10S011JA2	4.5	3.0	3.67	3.4	3.6	4.54	2.0	0.5
FB10S013JA2	5.1	3.6	4.27	4.0	4.2	5.14	2.0	0.5
FB10S015JA2	5.7	4.2	4.87	4.6	4.8	5.74	3.0	0.5
FB10S019JA2	6.9	5.4	6.07	5.8	6.0	6.94	3.0	0.5
FB10S021JA2	7.5	6.0	6.67	6.4	6.6	7.54	3.0	0.5
FB10S025JA2	8.7	7.2	7.87	7.6	7.8	8.74	3.0	0.5
FB10S027JA2	9.3	7.8	8.47	8.2	8.4	9.34	3.0	0.5
FB10S031JA2	10.5	9.0	9.67	9.4	9.6	10.54	5.0	1.0
FB10S033JA2	11.1	9.6	10.27	10.0	10.2	11.14	5.0	1.0
FB10S035JA2	11.7	10.2	10.87	10.6	10.8	11.74	5.0	1.0
FB10S039JA2	12.9	11.4	12.07	11.8	12.0	12.94	5.0	1.0
FB10S041JA2	13.5	12.0	12.67	12.4	12.6	13.54	8.0	1.0
FB10S045JA2	14.7	13.2	13.87	13.6	13.8	14.74	8.0	1.0
FB10S051JA2	16.5	15.0	15.67	15.4	15.6	16.54	8.0	1.0
FB10S061JA2	19.5	18.0	18.67	18.4	18.6	19.54	8.0	1.0

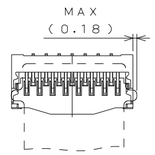

MATED CONDITION(REF.)
(SCALE 5:1)

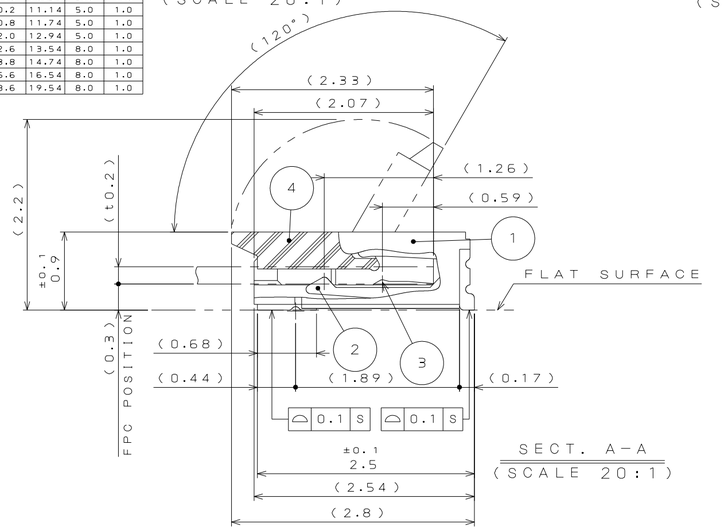

SECT. A−A
(SCALE 20:1)

NOTE
1. COVERLAY EDGE INCLUDES A PROJECTION OF AN ADHESION LAYER.
2. DIMENSION OF PATTERN TIP IS OPTIONAL. HOWEVER, MEASURE AGAINST PATTERN PEELING IS MANDATORY.
3. ××= NO. OF CONTACTS
4. RANGE(2.4mm) IN APPLICATION OF DIMENSION D.
5. RANGE(2.4mm) IN APPLICATION OF DIMENSION E.
△6 6. LOT NUMBER IS MARKED ON THE TOP PORTION OF THE CONNECTOR.

注記

1.カバーレイ端面は接着層のはみ出しを含む。
2.FPCパターン先端部の寸法は任意とし、パターン剥れ無き事。
3.××＝芯数
4.寸法2.4以下で、寸法Dを満足する事。
5.寸法2.4以下で、寸法Eを満足する事。
△6 6.ロット番号がコネクタ上面に表記される。

△

符号 NO.	名称 DESCRIPTION	個数 QTY.	材料 MATERIAL		仕上 FINISH	備考 REMARKS
4	ACTUATOR アクチュエータ	1	HEAT RESISTING PLASTICS 耐熱プラスチック			COLOR:BLACK／色相:黒
3	CONTACT 2 コンタクト 2	(N+1)/2	PHOSPHER BRONZE りん青銅	PARTIAL GOLD OVER NICKEL CONTACT	接触部:1×0.1μm 以上 端子部:1×0.03μm 以上	
2	CONTACT 1 コンタクト 1	(N−1)/2	PHOSPHER BRONZE りん青銅	PARTIAL GOLD OVER NICKEL CONTACT	接触部:1×0.1μm 以上 端子部:1×0.03μm 以上	
1	BASE INSULATOR ベースインシュレータ	1	HEAT RESISTING PLASTICS 耐熱プラスチック			COLOR:WHITE／色相:白

仕様書(SPECIFICATION) JACS-10724-× JAHL-10724-×	第1版(ORIGINAL DATE) 15.Dec.2011	尺度(SCALE) 5:1	シリーズ(SERIES) FB10
一般公差(GENERAL TOLERANCE) 寸法(DIMENSION): .± 0.8, .× ± 0.4, .×× ± 0.1, .××× ± 角度(ANGLES): ×° ±, ×°× ′ ± 単位(UNIT):mm	製図 DR.	名称(TITLE) FB10S0××JA2 0.3mm PITCH FPC CONECTOR (NOTE3)	日本航空電子工業株式会社 JAPAN AVIATION ELECTRONICS INDUSTRY, LTD.
	担当 CHK. T.NEMOTO		
	査閲 APPD. ———		
	承認 APPD. M.KIKUCHI	質量(MASS)	図面番号(DRAWING NO.) SJ111993
			版数 (VER.) 6

SIZE A2

JAE-CONNECTOR.COM
Reference Only

JAE CONNECTOR DIV. PROPRIETARY.
COPYRIGHT (C) 2011. JAPAN AVIATION ELECTRONICS INDUSTRY, LTD.

DCF-C-213H(12.08)