Chipsmall Limited consists of a professional team with an average of over 10 year of expertise in the distribution of electronic components. Based in Hongkong, we have already established firm and mutual-benefit business relationships with customers from,Europe,America and south Asia,supplying obsolete and hard-to-find components to meet their specific needs.

With the principle of “Quality Parts,Customers Priority,Honest Operation,and Considerate Service”,our business mainly focus on the distribution of electronic components. Line cards we deal with include Microchip,ALPS,ROHM,Xilinx,Pulse,ON,Everlight and Freescale. Main products comprise IC,Modules,Potentiometer,IC Socket,Relay,Connector.Our parts cover such applications as commercial,industrial, and automotives areas.

We are looking forward to setting up business relationship with you and hope to provide you with the best service and solution. Let us make a better world for our industry!

Contact us

Tel: +86-755-8981 8866 Fax: +86-755-8427 6832
Email & Skype: info@chipsmall.com Web: www.chipsmall.com
Address: A1208, Overseas Decoration Building, #122 Zhenhua RD., Futian, Shenzhen, China

図面番号(DRAWING NO.) SJ036196

版数 REV.	年月日 DATE	DCN NO.	変更内容 DESCRIPTION	製図 DR.	担当 CHK.	査閲 APPD.	承認 APPD.
2	6.Sep.2001	48701	STANDARDIZED PLATING THICKNESS OF THE FPC ADDED DIMENSIONS OF FOOT PATTERN	———	K.INOUE	———	O.HASHIGUCHI
3	8.Mar.2002	49626	REVISED DIMENSION	———	K.INOUE	———	O.HASHIGUCHI
4	23.Apr.2003	51997	ADDED DIMENSION	———	K.INOUE	———	O.HASHIGUCHI
5	11.May.2004	054865	AN ADDITIONAL MATTER	T.NEMOTO	K.INOUE	———	O.HASHIGUCHI
6	9.Feb.2005	056722	ADDED LOT NUMBER	———	K.INOUE	———	O.Hashiguchi

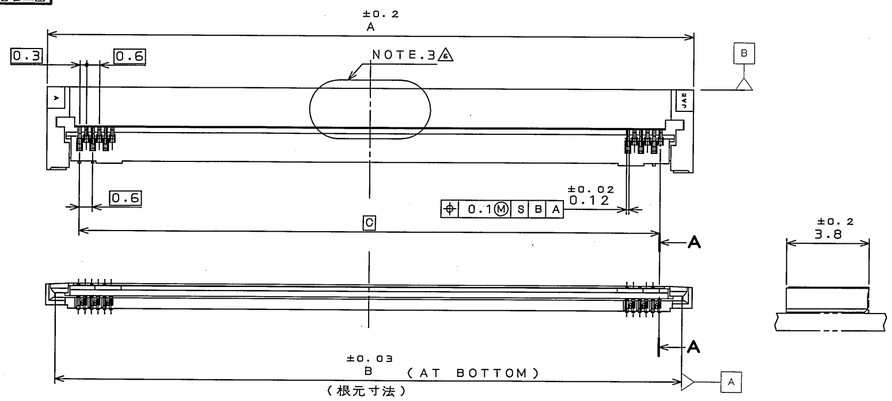

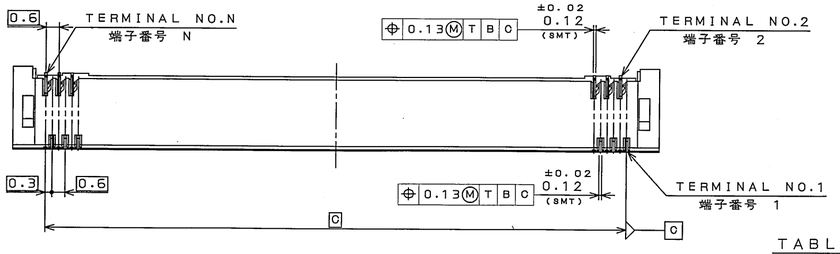

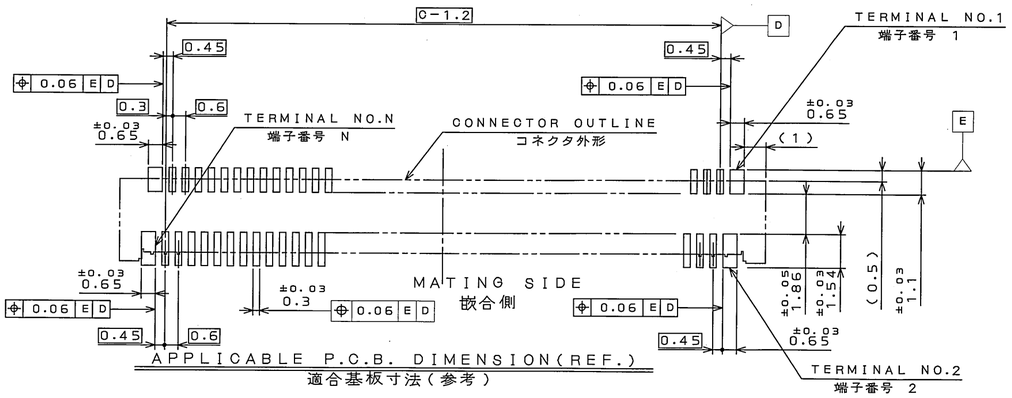

APPLICABLE P.C.B. DIMENSION(REF.)
適合基板寸法(参考)

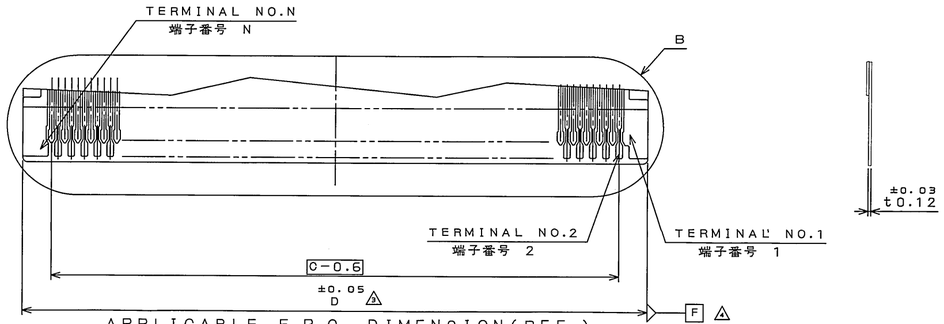

APPLICABLE F.P.C. DIMENSION(REF.)
適合FPC寸法(参考)

TABLE 1 △

PRODUCT NO. 品名	A	B	C	D
FF0290SS1	29.7	28.81	26.7	28.73
FF0270SS1	23.7	22.81	20.7	22.73
FF0260SS1	20.7	19.81	17.7	19.73

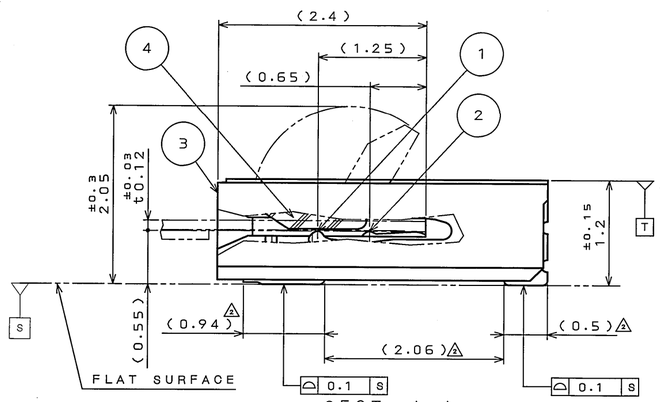

SECT. A−A
(SCALE 20:1)

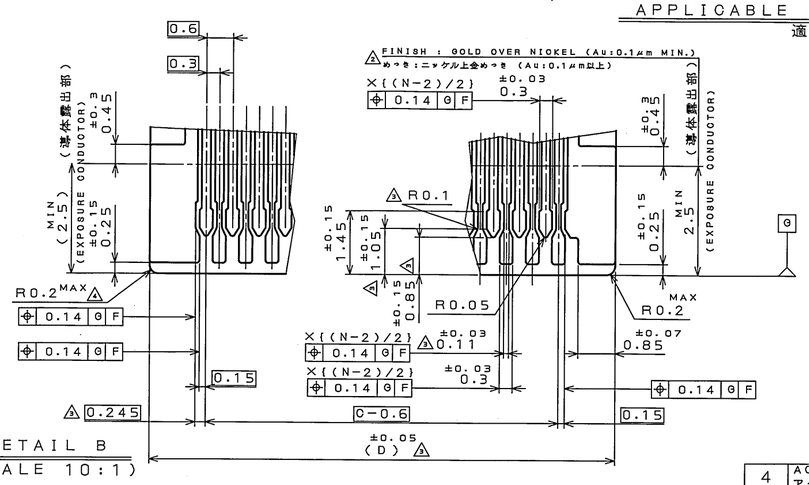

DETAIL B
(SCALE 10:1)

NOTE 1. REFER TO THE DRAWING SJ036197 FOR ODD NUMBER OF CONTACTS.
△△NOTE 2. FPC COMPOSITION (RECOMMENDED) REFER TO TABEL2
△NOTE 3. LOT NUMBER IS MARKED ON THE TOP CENTER PORTION OF THE CONNECTOR.

注1.奇数芯数のコネクタ寸法は SJ036197 参照.
△△注2.FPC構成(推奨)
TABLE2 参照.
△注3.ロット番号がコネクタ上面中央部に表記される.

DESIGNATION
命名法

FF02＊＊SS1

- SERIES シリーズ
- NO. OF CONTACTS (N) 芯数 (N) (NOTE 1) (注1)
- CONNECTOR FORM (S:SOCKET) コネクタ形状 (S:ソケット)
- MODIFICATION S:NICKEL BARRIER モディファイ ニッケルバリア
- CONTACT FINISH (1:GOLD OVER NICKEL(Au0.1μm MIN)) コンタクトめっき仕様 (1:ニッケル上金めっき(Au0.1μm以上))

TABLE2△

COMPOSITION 層名		THICKNESS(EXAMPLE) 厚さ(例)	NOTE 備考
GOLD PLATING 金めっき	ELECTROLYSIS PLATING 電解めっき	0.3〜0.6μm	0.1μm MIN
NICKEL PLATING ニッケルめっき	ELECTROLYSIS PLATING 電解めっき	3〜9μm	SOFT TYPE IF AVAILABLE
COPPER 銅箔	ROLLED MATERIAL 圧延銅	18μm	NOMINAL 18μm MAX
ADHESIVE 接着剤	THERMOSETTING ADHESIVE 熱硬化性	13μm	NONE (RECOMMENDED)
BASE FILM ベースフィルム	POLYIMIDE ポリイミド	25μm	25μm
ADHESIVE 接着剤	THERMOSETTING ADHESIVE 熱硬化性	15μm	30μm MAX
REINFORCE PLATE 補強板	POLYIMIDE ポリイミド	12.5μm	—

符号 NO.	名称 DESCRIPTION	個数 QTY.	材料 MATERIAL	仕上 FINISH	備考 REMARKS
4	ACTUATOR アクチュエータ	1	PPS	———	COLOR:BLACK/色相:黒 UL94V-0
3	BASE INSULATOR ベースインシュレータ	1	LCP	———	COLOR:WHITE/色相:白 UL94V-0
2	CONTACT 2 コンタクト 2	N/2	COPPER ALLOY 銅合金	PARTIAL GOLD OVER NICKEL(Au0.1μm MIN.) ニッケル上部分金(Au0.1μm 以上) △	———
1	CONTACT 1 コンタクト 1	N/2	COPPER ALLOY 銅合金	PARTIAL GOLD OVER NICKEL CONTACT:Au0.1μm MIN TERMINAL:Au0.03μm MIN ニッケル上部分金 接触部:Au0.1μm 以上 端子部:Au0.03μm 以上 △	———

仕様書(SPECIFICATION) JACS-1627 JAHL-1627

一般公差(GENERAL TOLERANCE)

寸法(DIMENSION)	角度(ANGLES)
. ±0.8	X° ±
.X ±0.4	X°X' ±
.XX ±0.1	
.XXX ±	

第1版(ORIGINAL DATE)	1.Aug.2001
製図 DR.	———
担当 CHK.	K.INOUE
査閲 APPD.	———
承認 APPD.	O.HASHIGUCHI

尺度(SCALE) 5:1
シリーズ(SERIES) FF02
名称(TITLE) FF02＊＊SS1
質量(MASS)

日本航空電子工業株式会社
JAPAN AVIATION ELECTRONICS INDUSTRY, LTD.

図面番号(DRAWING NO.) SJ036196
版数(REV.) 6
SIZE A2

JAE CONNECTOR.COM
Reference Only

JAE CONNECTOR DIV. PROPRIETARY.
COPYRIGHT (C) 2001, JAPAN AVIATION ELECTRONICS INDUSTRY, LTD.

DOF-0-213E(03.08)