Chipsmall Limited consists of a professional team with an average of over 10 year of expertise in the distribution of electronic components. Based in Hongkong, we have already established firm and mutual-benefit business relationships with customers from,Europe,America and south Asia,supplying obsolete and hard-to-find components to meet their specific needs.

With the principle of “Quality Parts,Customers Priority,Honest Operation,and Considerate Service”,our business mainly focus on the distribution of electronic components. Line cards we deal with include Microchip,ALPS,ROHM,Xilinx,Pulse,ON,Everlight and Freescale. Main products comprise IC,Modules,Potentiometer,IC Socket,Relay,Connector.Our parts cover such applications as commercial,industrial, and automotives areas.

We are looking forward to setting up business relationship with you and hope to provide you with the best service and solution. Let us make a better world for our industry!

Contact us

Tel: +86-755-8981 8866 Fax: +86-755-8427 6832
Email & Skype: info@chipsmall.com Web: www.chipsmall.com
Address: A1208, Overseas Decoration Building, #122 Zhenhua RD., Futian, Shenzhen, China

版数 REV.	年月日 DATE	DCN NO.	変更内容 DESCRIPTION	製図 DR.	担当 CHK.	査閲 APPD.	承認 APPD.

図面番号(DRAWING NO.) SJ105007

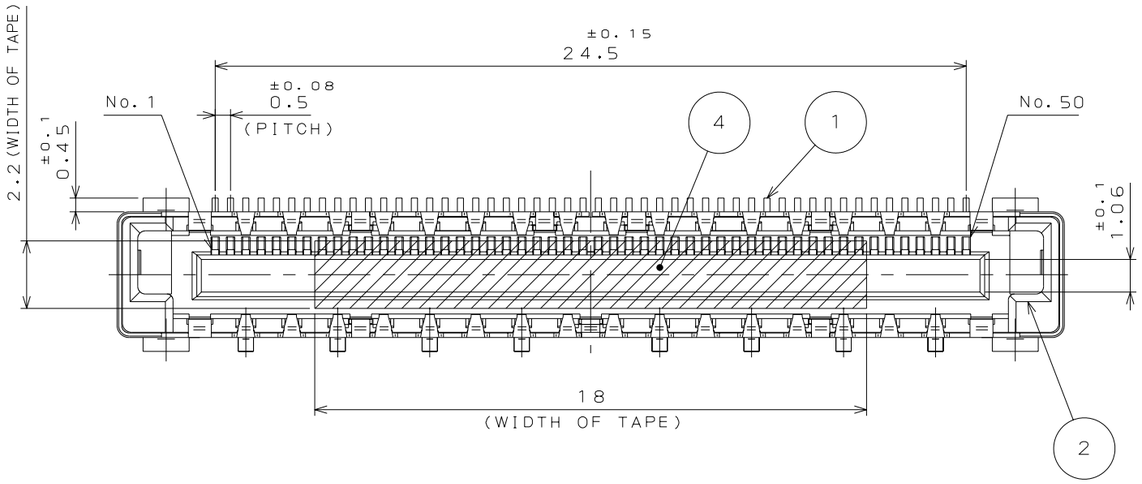

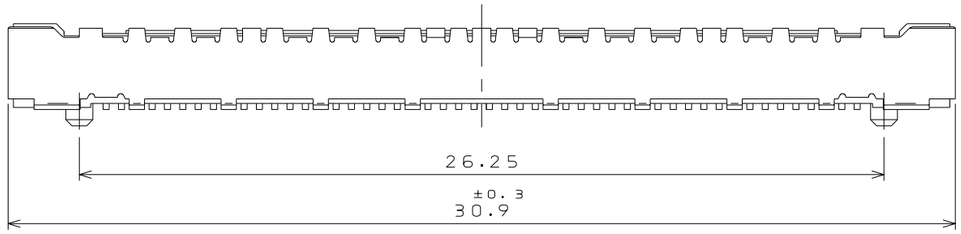

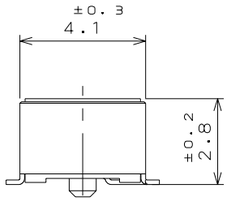

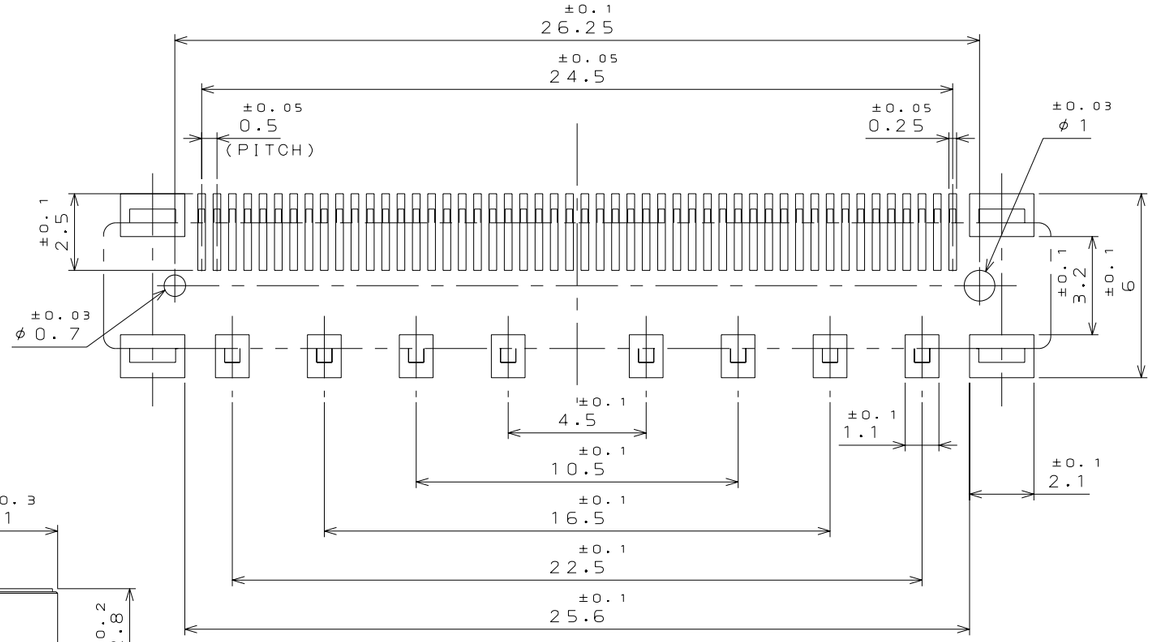

APPLICABLE P.C.B. DIMENSION (REF.)
適合基板寸法(参考)

TABLE 1
表1

CONTACT AREA 接触部	TERMINAL AREA 端子部
GOLD(MIN.0.76μm) OVER NICKEL Ni上Au(0.76μm以上)	GOLD(MIN.0.03μm) OVER NICKEL Ni上Au(0.03μm以上)

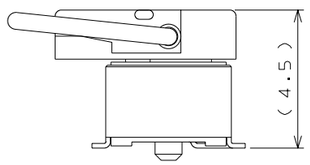

MATED CONDITION (REF.)
嵌合状態(参考)

符号 NO.	名称 DESCRIPTION	個数 QTY.	材料 MATERIAL	仕上 FINISH	備考 REMARKS
4	HEAT RESISTING TAPE 耐熱テープ	1	PI.		t0.05
3	SHELL シェル	1	COPPER ALLOY 銅合金	TIN PLATING スズメッキ	
2	INSULATOR インシュレータ	1	HEAT RESISTING PLASTIC 耐熱性プラスティック	――――――	UL94V-0 BLACK 黒
1	CONTACT コンタクト	50	COPPER ALLOY 銅合金	SEE TABLE1 表2参照	

仕様書(SPECIFICATION)

第1版(ORIGINAL DATE) 8.Sep.2005

製図 DR.

一般公差(GENERAL TOLERANCE)

寸法(DIMENSION)	角度(ANGLES)
. ±0.8	X° ±
.X ±0.4	X°X' ±
.XX ±0.1	
.XXX ±	

担当 CHK.	T.YAMAJI
査閲 APPD.	M.SUZUKI
承認 APPD.	K.HISATOMI

尺度(SCALE) 5:1

シリーズ(SERIES) FI

名称(TITLE) FI-TD50SB-E

質量(MASS)

日本航空電子工業株式会社
JAPAN AVIATION ELECTRONICS INDUSTRY, LTD.

図面番号(DRAWING NO.) SJ105007

版数(REV.) 1

SIZE A3

特別管理品目
SPECIAL CONTROL ITEM
Dcom

REFERENCE ONLY
JAE

LEAD FREE この製品は鉛フリー品です

JAE CONNECTOR DIV. PROPRIETARY.
COPYRIGHT (C) 2005. JAPAN AVIATION ELECTRONICS INDUSTRY, LTD.

DCF-C-212F(05.08)

0 10 20 30 40 50 60 70 80 90 100