Chipsmall Limited consists of a professional team with an average of over 10 year of expertise in the distribution of electronic components. Based in Hongkong, we have already established firm and mutual-benefit business relationships with customers from,Europe,America and south Asia,supplying obsolete and hard-to-find components to meet their specific needs.

With the principle of “Quality Parts,Customers Priority,Honest Operation,and Considerate Service”,our business mainly focus on the distribution of electronic components. Line cards we deal with include Microchip,ALPS,ROHM,Xilinx,Pulse,ON,Everlight and Freescale. Main products comprise IC,Modules,Potentiometer,IC Socket,Relay,Connector.Our parts cover such applications as commercial,industrial, and automotives areas.

We are looking forward to setting up business relationship with you and hope to provide you with the best service and solution. Let us make a better world for our industry!

Contact us

Tel: +86-755-8981 8866 Fax: +86-755-8427 6832
Email & Skype: info@chipsmall.com Web: www.chipsmall.com
Address: A1208, Overseas Decoration Building, #122 Zhenhua RD., Futian, Shenzhen, China

THIS COPY IS PROVIDED ON A RESTRICTED BASIS AND IS NOT TO BE USED IN ANY WAY DETRIMENTAL TO THE INTERESTS OF PANDUIT CORP.

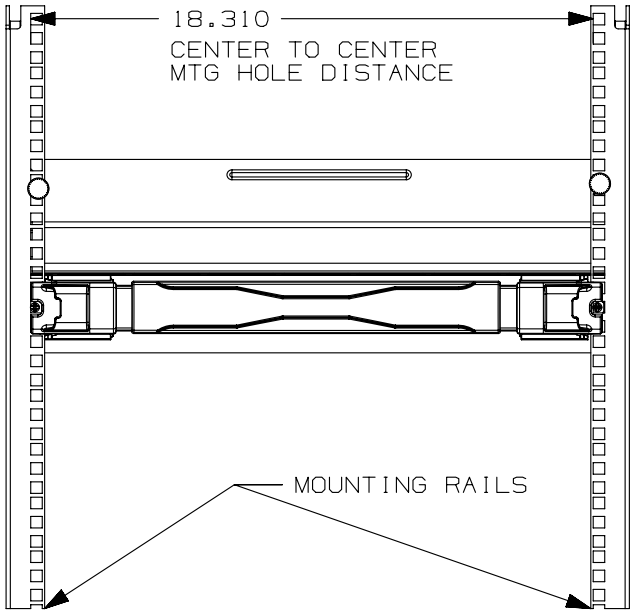

FIGURES DEPICT PRODUCT NEAR FULL RETRACTION OF SHADE

NOTES:
1. MAX TEMPERATURE RATING OF PRODUCT IS 50°C (122°F) CONTINUOUS; 70°C (158°F) INTERMITTENT
2. SHADE FABRIC IS STATIC DISSIPATIVE.
3. MINIMUM RACK UNIT TO BE BLANKED IS 4RU; MAXIMUM RACK UNIT TO BE BLANKED IS 51RU
4. PRODUCT TO BE USED WITH MOUNTING RAILS THAT HAVE 3/8" SQUARE PUNCHED HOLES, AND FOR RACKS WITH M5, M6, #10 OR #12 THREADED HOLES.
5. PRODUCT MAY BE USED WITH 11ga - 14ga THICK STEEL OR UP TO .185" THK ALUMINUM MOUNTING RAILS.
6. SHADE IS INSTALLED FROM BACK OF MOUNTING RAIL.
7. REFER TO PANDUIT WEBSITE FOR INSTALLATION INSTRUCTIONS.
8. PRODUCT IS RoHS COMPLIANT.

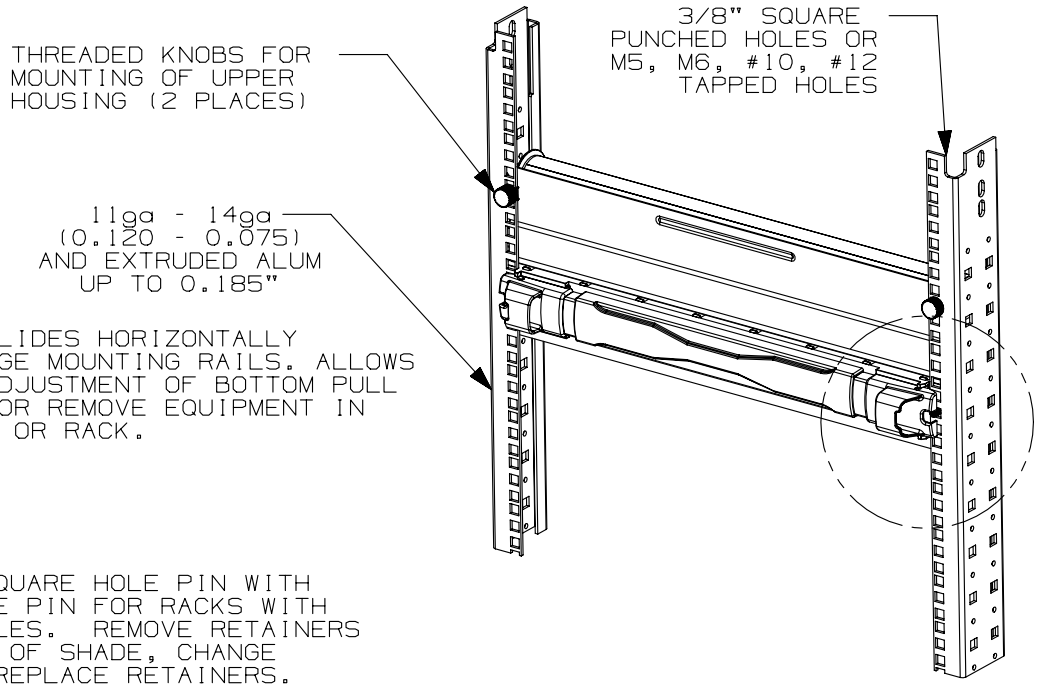

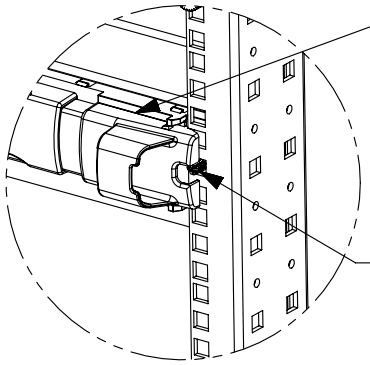

REV	DATE	BY	CHK	APR	DESCRIPTION	ECN
0	10/1/14	DFA	DJW	KLN	INITIAL RELEASE	GAECN02077

TITLE

FULL LENGTH BLANKING SHADE (FLBSIM-51)

CUSTOMER DRAWING

ITEM REVISION NAME: 13K003AD/00

DATASET FILE NAME: 13K003AD_DC_C11482/00A

UNLESS OTHERWISE SPECIFIED, DIMENSIONAL TOLERANCES ARE: IN [mm]

.X ± .1 [2.54] .XXX ± .005 [.127]
.XX ± .01 [.25] ANGLES ± 5 °

THIRD ANGLE PROJECTION

MATERIAL:

DRAWING NUMBER: C11482

DRAWN BY	DATE	CHK	SCALE		SIZE
DFA	9/17/14	KLN	NONE	SHT 1 OF 1	A