Chipsmall Limited consists of a professional team with an average of over 10 year of expertise in the distribution of electronic components. Based in Hongkong, we have already established firm and mutual-benefit business relationships with customers from,Europe,America and south Asia,supplying obsolete and hard-to-find components to meet their specific needs.

With the principle of “Quality Parts,Customers Priority,Honest Operation,and Considerate Service”,our business mainly focus on the distribution of electronic components. Line cards we deal with include Microchip,ALPS,ROHM,Xilinx,Pulse,ON,Everlight and Freescale. Main products comprise IC,Modules,Potentiometer,IC Socket,Relay,Connector.Our parts cover such applications as commercial,industrial, and automotives areas.

We are looking forward to setting up business relationship with you and hope to provide you with the best service and solution. Let us make a better world for our industry!

Contact us

Tel: +86-755-8981 8866 Fax: +86-755-8427 6832
Email & Skype: info@chipsmall.com Web: www.chipsmall.com
Address: A1208, Overseas Decoration Building, #122 Zhenhua RD., Futian, Shenzhen, China

THIS COPY IS PROVIDED ON A RESTRICTED BASIS AND IS NOT TO BE USED IN ANY WAY DETRIMENTAL TO THE INTERESTS OF PANDUIT CORP.

PANDUIT P/N	WEIGHT
F06CB	.44 LB/10 PCS (220 g/10 PCS)

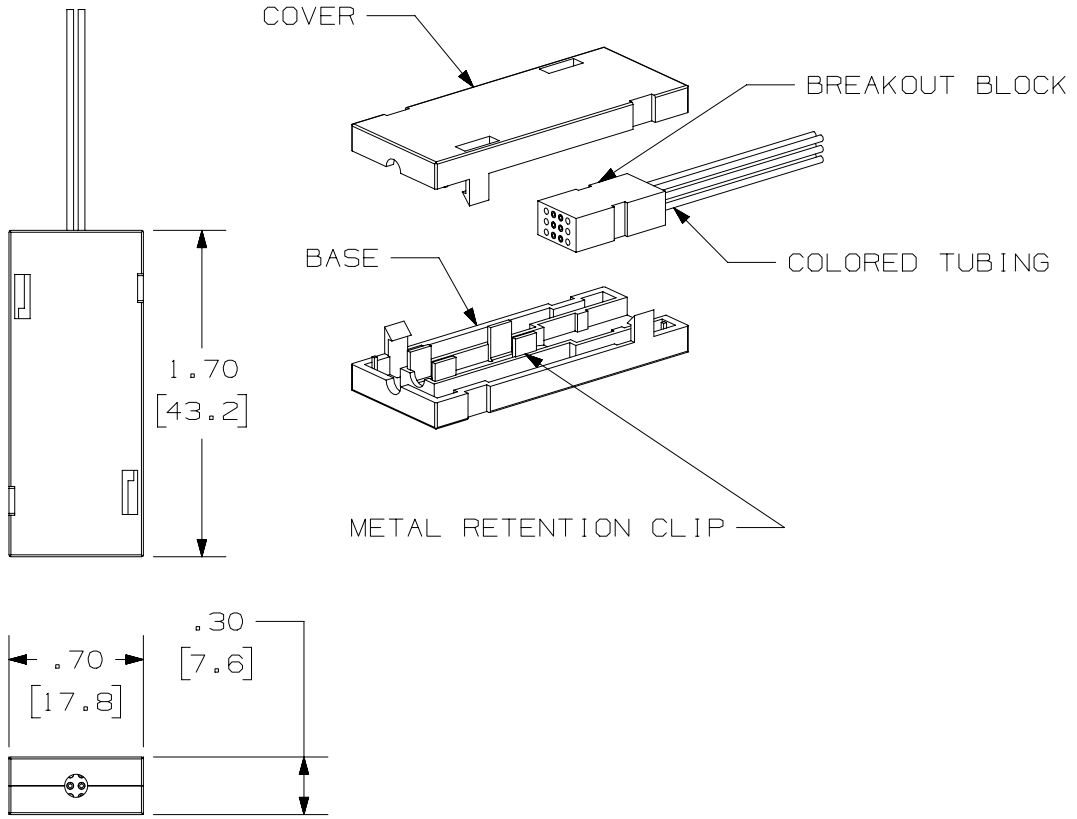

NOTES:

1. SEE CURRENT CATALOG FOR ADDITIONAL PART NUMBER SUFFIXES TO INDICATE COLOR AND OR PACKAGE QUANTITY.
2. DIMENSIONS IN PARENTHESES ARE IN METRIC.
3. MATERIAL:
   TUBING: HYTREL
   BASE, COVER AND BREAKOUT BLOCK: ABS
4. THE BREAKOUT BLOCK TUBE ASSEMBLY WILL ROUTE 250 MICRON FIBERS INTO INDIVIDUAL, 900 MICRON COLOR CODED BUFFERED TUBES.
5. TALC POWDER IS PROVIDED TO FACILITATE THREADING OF THE 250 MICRON FIBERS THROUGH THE COLORED TUBING.
6. THE TUBING WILL WITHSTAND A MINIMUM BEND RADIUS OF .51 INCHES (1.3 CM) WITHOUT ANY BREAKS OR KINKS.
7. DOUBLE-SIDED TAPE WILL IS PROVIDED FOR SECURING THE BASE.
8. THE BASE HAS A METAL RECTANGLE CLIP TO HOLD THE LOOSE TUBE IN PLACE AND WILL ACCEPT INDUSTRY STANDARD LOOSE TUBE FROM 2.00mm TO 3.20mm IN DIAMETER.
9. THE BASE HAS A CAVITY FOR HOLDING AND LOCKING THE BREAKOUT BLOCK IN PLACE.
10. TUBING COLOR CODE PER BELLCORE STANDARDS: 1/BLUE, 2/ORANGE, 3/GREEN, 4/BROWN, 5/SLATE, 6/WHITE
11. TUBE LENGTH IS 36" ±1.00".

REV	DATE	BY	CHK	APR	DESCRIPTION	ECN
1	5/19/15	JSP	WJM	RWB	A. UPDATED DRAWING TITLE BLOCK.	00526-04

PART NUMBER: F06CB

TITLE: FIBER OPTIC 6 TUBE FAN-OUT KIT

CUSTOMER DRAWING

ITEM REVISION NAME: M00526AB/00

DATASET FILE NAME: M00526AB_DC/00C

UNLESS OTHERWISE SPECIFIED, DIMENSIONAL TOLERANCES ARE: IN [mm]

.X ± .XXX ±

.XX ± ANGLES ±

THIRD ANGLE PROJECTION

MATERIAL:

DRAWING NUMBER: 00526-04

DRAWN BY	DATE	CHK	SCALE	SHT 1 OF 1	SIZE
JBA	6-29-99		NONE		A

D10100DA/14