Chipsmall Limited consists of a professional team with an average of over 10 year of expertise in the distribution of electronic components. Based in Hongkong, we have already established firm and mutual-benefit business relationships with customers from,Europe,America and south Asia,supplying obsolete and hard-to-find components to meet their specific needs.

With the principle of “Quality Parts,Customers Priority,Honest Operation,and Considerate Service”,our business mainly focus on the distribution of electronic components. Line cards we deal with include Microchip,ALPS,ROHM,Xilinx,Pulse,ON,Everlight and Freescale. Main products comprise IC,Modules,Potentiometer,IC Socket,Relay,Connector.Our parts cover such applications as commercial,industrial, and automotives areas.

We are looking forward to setting up business relationship with you and hope to provide you with the best service and solution. Let us make a better world for our industry!

# Contact us

Tel: +86-755-8981 8866 Fax: +86-755-8427 6832
Email & Skype: info@chipsmall.com Web: www.chipsmall.com
Address: A1208, Overseas Decoration Building, #122 Zhenhua RD., Futian, Shenzhen, China

FO-55111-A

HONEYWELL PART NUMBER
1

| REV | DOCUMENT | CHANGED BY | CHECK |
|---|---|---|---|
| A | 0016810 | TSG 03NOV05 | RJ |

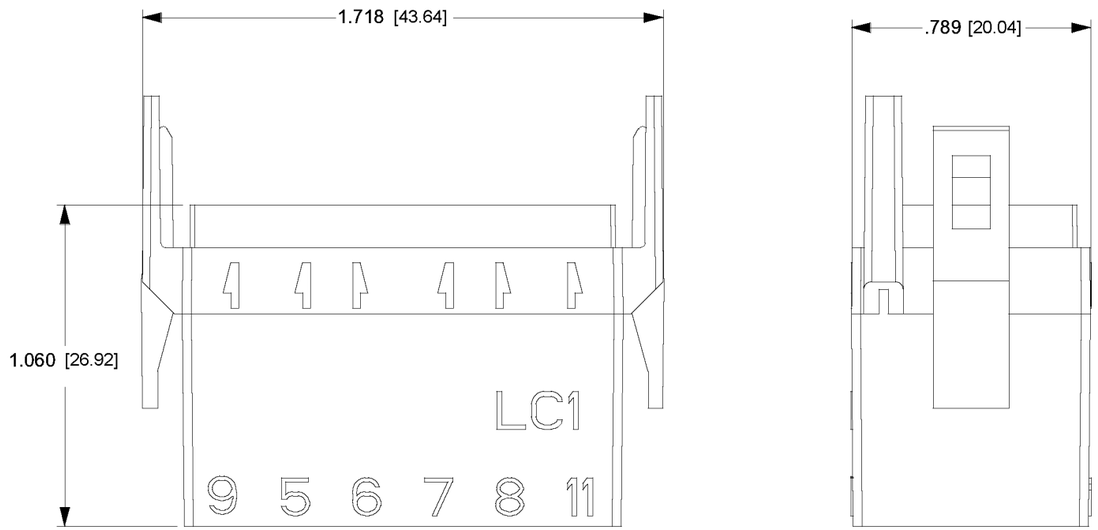


CONNECTOR HOUSING: FR-01 1 2 3

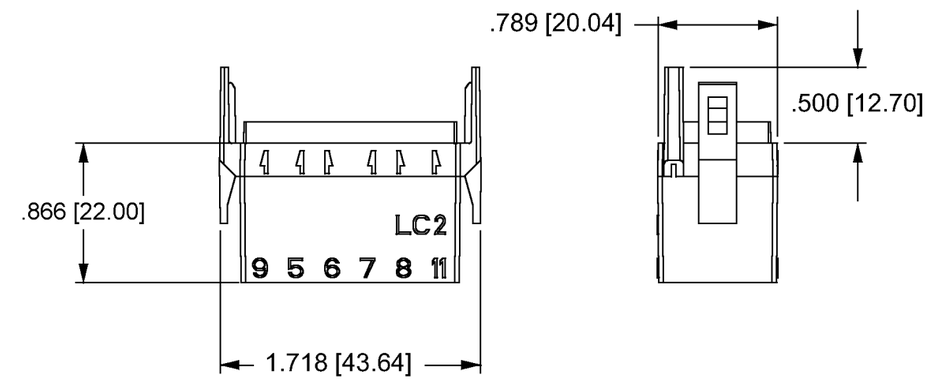


CONNECTOR HOUSING: FR-02 1 4 5

NOTES
1. AVAILABLE ACCESSORIES ARE THE FR-01 CONNECTOR HOUSING AND THE FR-02 CONNECTOR HOUSING
2. FR-01 CONNECTOR HOUSING FOR USE ON FRL AND FRN SERIES SWITCHES WITH .250 [6.35] WIDE TERMINALS (FRL91 AND FRN 91)
3. RECOMMENDED WIRE TERMINALS FOR USE WITH FR-01 CONNECTOR HOUSING ARE DELPHI PACKARD METRI-PACK 630 SERIES
4. FR-02 CONNECTOR HOUSING FOR USE ON FRL AND FRN SERIES SWITCHES WITH .187 [4.76] WIDE TERMINALS (FRL93 AND FRN93)
5. RECOMMENDED WIRE TERMINALS FOR USE WITH FR-02 CONNECTOR HOUSING ARE DELPHI PACKARD METRI-PACK 480 SERIES

DESIGN UNITS: INCH
TOLERANCES UNLESS NOTED:

| | | | |
|---|---|---|---|
| NO PLACE | X | ± | 0.040 |
| ONE PLACE | .X | ± | 0.030 |
| TWO PLACE | .XX | ± | 0.015 |
| THREE PLACE | .XXX | ± | 0.005 |
| FOUR PLACE | .XXXX | ± | 0.0005 |
| ANGLES | | ± | 2 |

THIRD ANGLE PROJECTION

| | | |
|---|---|---|
| DRAWN | KSR | 30SEP05 |
| CHECK | RJ | 30SEP05 |

THIS DRAWING COVERS A PROPRIETARY ITEM AND IS THE PROPERTY OF HONEYWELL. THIS DRAWING IS NOT TO BE COPIED OR USED WITHOUT THE PERMISSION OF HONEYWELL.

INTERPRET PER ASME Y14.5M-1994 OTHER HONEYWELL ENGINEERING STANDARDS MAY APPLY

RASTER

Honeywell

TITLE
# PACKET

| SIZE | TYPE | DRAWING NAME | REV |
|---|---|---|---|
| B | I | FR ACCESSORIES SERIES CHART 1 | A |

SCALE -

SHEET 1 OF 1