Chipsmall Limited consists of a professional team with an average of over 10 year of expertise in the distribution of electronic components. Based in Hongkong, we have already established firm and mutual-benefit business relationships with customers from,Europe,America and south Asia,supplying obsolete and hard-to-find components to meet their specific needs.

With the principle of “Quality Parts,Customers Priority,Honest Operation,and Considerate Service”,our business mainly focus on the distribution of electronic components. Line cards we deal with include Microchip,ALPS,ROHM,Xilinx,Pulse,ON,Everlight and Freescale. Main products comprise IC,Modules,Potentiometer,IC Socket,Relay,Connector.Our parts cover such applications as commercial,industrial, and automotives areas.

We are looking forward to setting up business relationship with you and hope to provide you with the best service and solution. Let us make a better world for our industry!

Contact us

Tel: +86-755-8981 8866 Fax: +86-755-8427 6832
Email & Skype: info@chipsmall.com Web: www.chipsmall.com
Address: A1208, Overseas Decoration Building, #122 Zhenhua RD., Futian, Shenzhen, China

THIS COPY IS PROVIDED ON A RESTRICTED BASIS AND IS NOT TO BE USED IN ANY WAY DETRIMENTAL TO THE INTERESTS OF PANDUIT CORP.

A

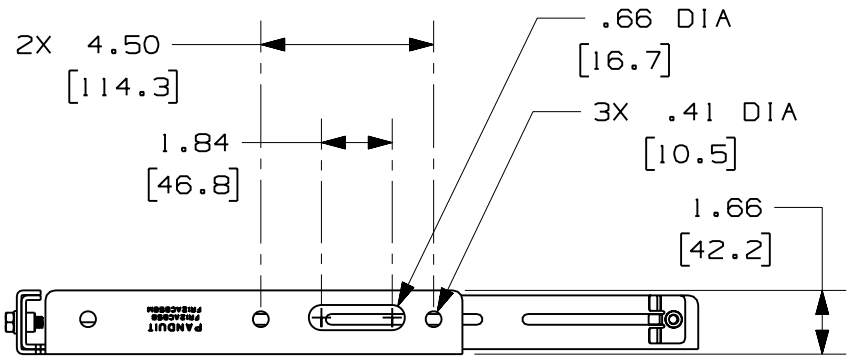

PANDUIT PART NUMBER	WEIGHT
FR12ACB58 FR12ACB58M	4.41 LB/EACH (1998g/EACH)

D

E NOTES:

1. SEE CURRENT CATALOG FOR ADDITIONAL PART SUFFIXES TO INDICATE PACKAGE QUANTITY.
2. THE FIBERRUNNER 12x4 QUIKLOCK ADJUSTABLE "C" BRACKET IS USED TO SUPPORT THE FIBERRUNNER 12x4 CABLE ROUTING SYSTEM FROM A SECTION OF NEW 5/8" (M16) THREADED ROD (NOT INCLUDED) OR CAN BE DIRECTLY MOUNTED TO THE CEILING.
3. THE FIBERRUNNER 12x4 QUIKLOCK ADJUSTABLE "C" BRACKET INCLUDES:
   ONE (1) BRACKET ASSEMBLY,
   TWO (2) 5/8-11 HEAVY HEX NUTS (FR12ACB58 ONLY),
   TWO (2) M16x2 HEX NUTS (FR12ACB58M ONLY),
   TWO (2) 5/8 HELICAL SPRING LOCKWASHERS,
   ONE (1) 1/4-20 T-BOLT,
   ONE (1) 1/4-20 HEX KEPS LOCK NUT
4. FINISH COLOR: BLACK (EXCEPT HARDWARE)
5. DIMENSIONS IN PARENTHESES ARE IN METRIC.

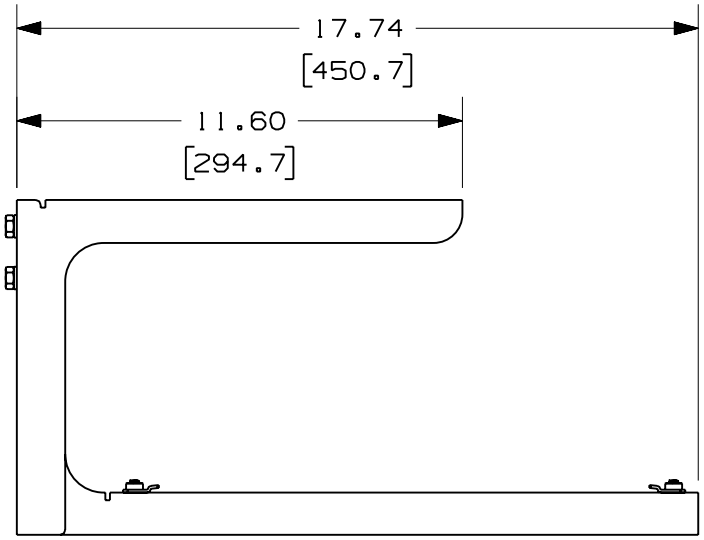

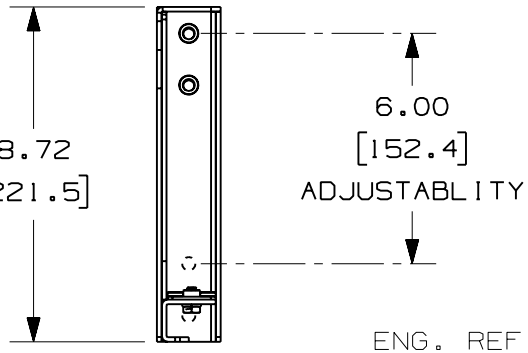

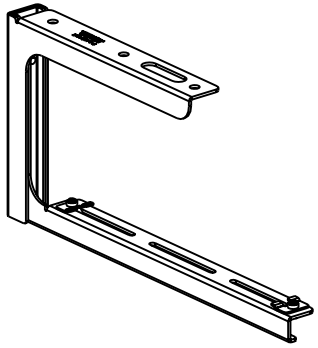

ENG. REF.: D37797ES_DC_FR12ACB58_01.prt

CAD FILENAME/LAYERS B FR12ACB58.pdf

PANDUIT CORP TINLEY PARK, ILLINOIS

C FIBERRUNNER 12x4 QUIKLOCK ADJUSTABLE "C" BRACKET - 5/8" (M16) THREADED ROD (FR12ACB58, FR12ACB58M)
CUSTOMER DRAWING

UNLESS OTHERWISE SPECIFIED, DIMENSIONAL TOLERANCES ARE:
(.X) ± (.XXX) ±
(.XX) ±.03 (.8) ANGLES ±

UNLESS OTHERWISE SPECIFIED, ALL DIMENSIONS ARE GIVEN IN INCHES, THIRD ANGLE PROJECTION.

DRAWN BY JHNU
MAT'L: STEEL
SCALE NONE
DATE 5-24-01
CHK'D HIW
DRAWING NO. 37797-101
DWG A
SIZE

REV	DATE	BY	CHK	DESCRIPTION	ECN	R	CUST	SUP	GMBH
-	--------	---	--	E. REVISED GENERAL NOTES.	--------	--	--		
-	--------	---	--	D. REVISED PART WEIGHT. C. REVISED DRAWING TITLE.	--------	--	--		
1	1-3-07	MSO	RN	B. REVISED CAD FILENAME. A. REVISED AND REDRAWN.	37797-101	RN	RN		