Chipsmall Limited consists of a professional team with an average of over 10 year of expertise in the distribution of electronic components. Based in Hongkong, we have already established firm and mutual-benefit business relationships with customers from,Europe,America and south Asia,supplying obsolete and hard-to-find components to meet their specific needs.

With the principle of “Quality Parts,Customers Priority,Honest Operation,and Considerate Service”,our business mainly focus on the distribution of electronic components. Line cards we deal with include Microchip,ALPS,ROHM,Xilinx,Pulse,ON,Everlight and Freescale. Main products comprise IC,Modules,Potentiometer,IC Socket,Relay,Connector.Our parts cover such applications as commercial,industrial, and automotives areas.

We are looking forward to setting up business relationship with you and hope to provide you with the best service and solution. Let us make a better world for our industry!

Contact us

Tel: +86-755-8981 8866 Fax: +86-755-8427 6832
Email & Skype: info@chipsmall.com Web: www.chipsmall.com
Address: A1208, Overseas Decoration Building, #122 Zhenhua RD., Futian, Shenzhen, China

THIS COPY IS PROVIDED ON A RESTRICTED BASIS AND IS NOT TO BE USED IN ANY WAY DETRIMENTAL TO THE INTERESTS OF PANDUIT CORP.

PANDUIT PART NUMBER	WEIGHT
FRTSC12W4	1.01 LB/EACH (458g/EACH)

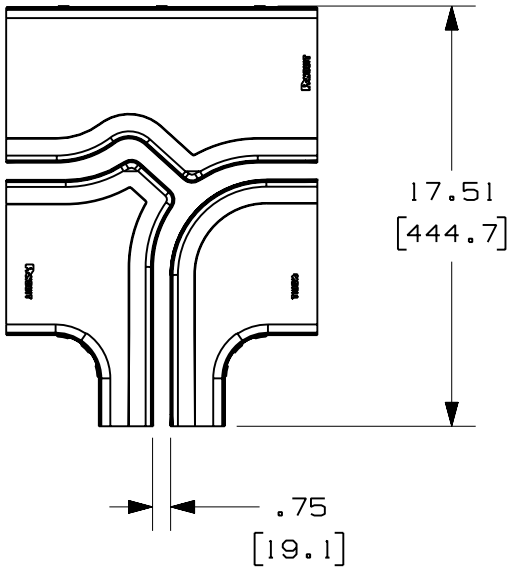

NOTES:

1. SEE CURRENT CATALOG FOR ADDITIONAL PART SUFFIXES TO INDICATE COLOR AND/OR PACKAGE QUANTITY.
2. THE FIBERRUNNER 12x4 HORIZONTAL TEE WITH 4" EXIT SPLIT COVER REQUIRES NO TOOLS FOR INSTALLATION AND/OR REMOVAL. THE SPLIT COVER CREATES A 3/4" (19.1) RADIUSED OPENING TO ALLOW FOR NEW CABLES TO BE ADDED WITHOUT THE NEED FOR REMOVING THE COVERS.
3. DIMENSIONS IN PARENTHESES ARE IN METRIC.

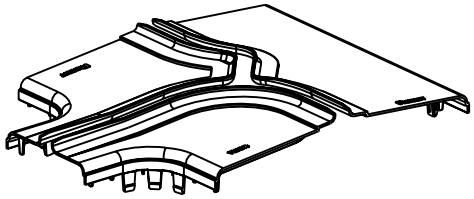

ENG. REF.: D39774BH_DC/00 FRTSC12W4

REV	DATE	BY	CHK	DESCRIPTION	ECN	-	R	CUST	SUP	GMBH
R	10-22-08	MSO	SL	RELEASED TO PRODUCTION	39774-08		RN	RN		

CAD FILENAME/LAYERS: FRTSC12W4.pdf

PANDUIT CORP TINLEY PARK, ILLINOIS

FIBERRUNNER 12x4 HORIZONTAL TEE WITH 4" EXIT SPLIT COVER (FRTSC12W4)

CUSTOMER DRAWING

UNLESS OTHERWISE SPECIFIED, DIMENSIONAL TOLERANCES ARE:
(.X) ± (.XXX) ±
(.XX) ±.03 (.8) ANGLES ±

UNLESS OTHERWISE SPECIFIED, ALL DIMENSIONS ARE GIVEN IN INCHES, THIRD ANGLE PROJECTION.

DRAWN BY: MSO
DATE: 10-22-08
CHK'D: SL
MAT'L: ABS
SCALE: NONE
DRAWING NO.: 39774-08
DWG SIZE: A