Chipsmall Limited consists of a professional team with an average of over 10 year of expertise in the distribution of electronic components. Based in Hongkong, we have already established firm and mutual-benefit business relationships with customers from,Europe,America and south Asia,supplying obsolete and hard-to-find components to meet their specific needs.

With the principle of “Quality Parts,Customers Priority,Honest Operation,and Considerate Service”,our business mainly focus on the distribution of electronic components. Line cards we deal with include Microchip,ALPS,ROHM,Xilinx,Pulse,ON,Everlight and Freescale. Main products comprise IC,Modules,Potentiometer,IC Socket,Relay,Connector.Our parts cover such applications as commercial,industrial, and automotives areas.

We are looking forward to setting up business relationship with you and hope to provide you with the best service and solution. Let us make a better world for our industry!

Contact us

Tel: +86-755-8981 8866 Fax: +86-755-8427 6832
Email & Skype: info@chipsmall.com Web: www.chipsmall.com
Address: A1208, Overseas Decoration Building, #122 Zhenhua RD., Futian, Shenzhen, China

FAIRCHILD™

Is Now Part of

ON

ON Semiconductor®

To learn more about ON Semiconductor, please visit our website at
www.onsemi.com

Please note: As part of the Fairchild Semiconductor integration, some of the Fairchild orderable part numbers will need to change in order to meet ON Semiconductor's system requirements. Since the ON Semiconductor product management systems do not have the ability to manage part nomenclature that utilizes an underscore (_), the underscore (_) in the Fairchild part numbers will be changed to a dash (-). This document may contain device numbers with an underscore (_). Please check the ON Semiconductor website to verify the updated device numbers. The most current and up-to-date ordering information can be found at www.onsemi.com. Please email any questions regarding the system integration to Fairchild_questions@onsemi.com.

August 2014

FSA3041
High-Speed 4:1 USB2.0 / MHL™ / Audio / UART Switch

Features

- Low On Capacitance: 4.2 pF / 7.5 pF MHL / USB (Typical)
- Low Power Consumption: 30 µA Maximum
- Supports MHL Rev. 2.0
- MHL Data Rate: 3.8 Gbps
- LINOUT Swing: -1.5 V to +3.0 V (Typical)
- USB 2.0 Compliant
- Packaged in 16-Lead UMLP (1.8 x 2.6 mm)
- Over-Voltage Tolerance on All USB Ports: Up to 5.25 V without External Components

Applications

- Cell Phones
- Digital Cameras

Description

The FSA3041 is a bi-directional, low-power, high-speed, 4:1, USB2.0, MHL™, UART, and audio switch. Configured as a Double-Pole, Four-Throw (DP4T) switch; it is optimized for switching between high- or full-speed USB, Mobile High-Definition Link sources (MHL Rev. 2.0 specification), UART, and negative-swing capable audio. In addition, either USB 2.0 path can be used as a UART path.

The FSA3041 contains circuitry on the switch I/O pins, for applications where the V_{CC} supply is powered off (V_{CC} = 0 V), that allows the device to withstand an over-voltage condition. This switch is designed to minimize current consumption even when the control voltage applied to the control pins is lower than the supply voltage (V_{CC}). This is especially valuable in mobile applications, such as cell phones, allowing direct interface with the general-purpose I/Os of the baseband processor. Other applications include switching and connector sharing in portable cell phones, digital cameras, and notebook computers.

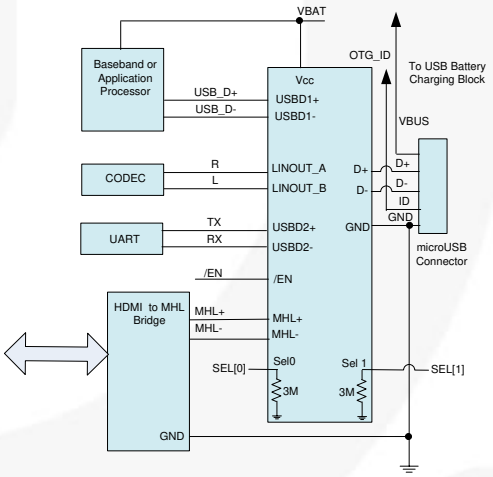

Figure 1. Typical Application

Ordering Information

Part Number	Top Mark	Operating Temperature Range	Package
FSA3041UMX	LZ	-40 to +85°C	16-Lead, Ultrathin Molded Leadless Package (UMLP), 1.8 mm x 2.6 mm

All trademarks are the property of their respective owners.

Pin Configuration

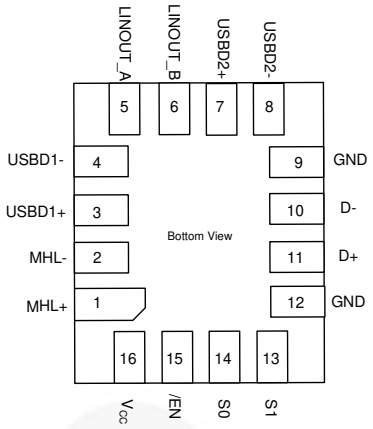

Figure 2. Pin Assignments

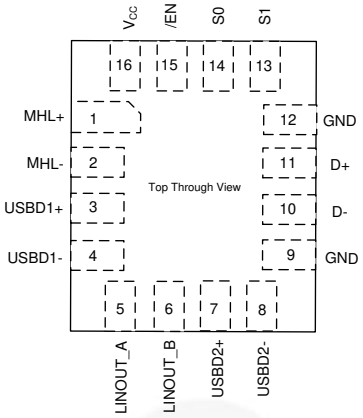

Figure 3. Top Through View

Pin Definitions

Pin#	Name	Description
1	MHL+	MHL Differential Data (Positive)
2	MHL-	MHL Differential Data (Negative)
3	USBD1+	USB Differential Data (Positive). Can also be used as additional UART.
4	USBD1-	USB Differential Data (Negative). Can also be used as additional UART.
5	LINOUT_A	Audio
6	LINOUT_B	Audio
7	USBD2+	USB Differential Data (Positive). Can be used as a UART port *(see Figure 1)*.
8	USBD2-	USB Differential Data (Negative). Can be used as a UART port *(see Figure 1)*.
9	GND	Ground
10	D-	USB Differential Data (Negative), Common Port
11	D+	USB Differential Data (Positive), Common Port
12	GND	Ground
13	SEL1	Data Switch Select *(see Table 1)*
14	SEL0	Data Switch Select *(see Table 1)*
15	/EN	Enable Pin - Active LOW
16	V_{CC}	Device Power from System (Typically V_{BAT})

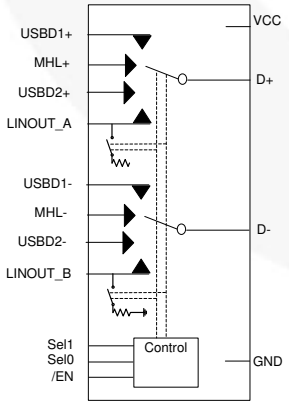

Figure 4. Analog Symbol

Table 1. Data Switch Select Truth Table

SEL1(1)	SEL0(1)	Shunt	/EN(1)	Function
0	0	Enabled	0	D+/D- connected to USBD1+/ USBD1- (or UART) path
0	1	Enabled	0	D+/D- connected to USBD2+/USBD2- (or UART) path
1	0	Enabled	0	D+/D- connected to MHL+/MHL- path
1	1	Disabled	0	D+/D- connected to LINOUT_A/LINOUT_B audio path
X	X	Disabled	1	D+/D- high impedance

Note:

1. Control inputs should never be left floating or unconnected.
   To guarantee default switch closure to the USB position, the SEL[0:1] pins are tied to GND with internal weak pull-down resistors (3MΩ) to minimize static current draw.

Absolute Maximum Ratings

Stresses exceeding the absolute maximum ratings may damage the device. The device may not function or be operable above the recommended operating conditions and stressing the parts to these levels is not recommended. In addition, extended exposure to stresses above the recommended operating conditions may affect device reliability. The absolute maximum ratings are stress ratings only.

Symbol	Parameter		Min.	Max.	Unit
V_{CC}	Supply Voltage		-0.5	5.5	V
V_{CNTRL}	DC Input Voltage (/EN, SEL[1:0])(2)		-0.5	V_{CC}	V
V_{SW}(3)	DC Switch I/O Voltage(2)	USB, MHL, UART	-0.5	V_{CC}	V
		Audio (Active)	-2.0	3.0	
		Audio (Inactive)	-2.0	V_{CC}	
I_{IK}	DC Input Diode Current		-50		mA
I_{OUT}	Switch DC Output Current (Continuous)	USB, MHL, UART		60	mA
		Audio		60	mA
$I_{OUTPEAK}$	Switch DC Output Peak Current (Pulsed at 1ms Duration, <10% Duty Cycle)	USB, MHL, UART		150	mA
		Audio		150	mA
T_{STG}	Storage Temperature		-65	+150	°C
MSL	Moisture Sensitivity Level: JEDEC J-STD-020A			1	
ESD	Human Body Model, JEDEC: JESD22-A114	All Pins		4	kV
	IEC 61000-4-2, Level 4, for D+/D- and V_{CC} Pins(4)	Contact		8	
	IEC 61000-4-2, Level 4, for D+/D- and V_{CC} Pins(4)	Air		15	
	Charged Device Model, JESD22-C101			2	

Notes:
2. The input and output negative ratings may be exceeded if the input and output diode current ratings are observed.
3. V_{SW} refers to analog data switch paths (USB, MHL, and audio).
4. Testing performed in a system environment using TVS diodes.

Recommended Operating Conditions

The Recommended Operating Conditions table defines the conditions for actual device operation. Recommended operating conditions are specified to ensure optimal performance to the datasheet specifications. Fairchild does not recommend exceeding them or designing to Absolute Maximum Ratings.

Symbol	Parameter	Min.	Max.	Unit
V_{CC}	Supply Voltage	2.5	4.5	V
$t_{RAMP(VCC)}$	Power Supply Slew Rate	100	1000	µs/V
V_{CNTRL}	Control Input Voltage (/EN, SEL[1:0])(5)	0	4.5	V
$V_{SW(USB)}$	Switch I/O Voltage (USB Switch Path)	-0.5	3.6	V
Θ_{JA}	Thermal Resistance		273	C°/W
$V_{SW(MHL)}$	Switch I/O Voltage (MHL Switch Path)	1.65	3.45	V
$V_{SW(AUD)}$	Switch I/O Voltage (Audio Switch Path)	-1.5	3.0	V
$V_{SW(UART)}$	Switch I/O Voltage (UART Switch Path)	-0.5	3.6	V
T_A	Operating Temperature	-40	+85	°C

Note:
5. The control inputs must be held HIGH or LOW; they must not float.

DC Electrical Characteristics

All typical value are at T_A = 25°C unless otherwise specified.

Symbol	Parameter	Condition	V_{CC} (V)	T_A=-40°C to +85°C			Unit
				Min.	Typ.	Max.	
V_{IK}	Clamp Diode Voltage	I_{IN}=-18 mA	2.5			-1.2	V
V_{IH}	Control Input Voltage HIGH	SEL[1:0]	2.5	1.3			V
			3.6	1.4			V
			4.5	1.5			V
V_{IL}	Control Input Voltage LOW	SEL[1:0]	2.5			0.4	V
			3.6			0.4	V
			4.5			0.4	V
I_{IN}	Control Input Leakage SEL[1:0]	V_{SW} (MHL & USB)=0 to 3.6 V, V_{SW}(AUD)=0 to 3 V, V_{CNTRL}=0 to V_{CC}	4.5	-2.5		2.5	µA
$I_{OZ(MHL)}$	Off-State Leakage for Open MHL Data Paths	V_{SW}=1.65 ≤ MHL ≤ 3.45 V, /EN=V_{CC}, Figure 6	4.5	-0.5		0.5	µA
$I_{OZ(USB, UART)}$	Off-State Leakage for Open USB Data Paths	V_{SW}=0 ≤ USB, UART ≤ 3.6 V, /EN=V_{CC}, Figure 6	4.5	-0.5		0.5	µA
$I_{CL(MHL)}$	On-State Leakage for Closed MHL Data Paths(6)	V_{SW}=1.65 ≤ MHL ≤ 3.45 V, /EN=GND, SEL0=GND, SEL1=V_{CC}	4.5	-0.5		0.5	µA
$I_{CL(USB, UART)}$	On-State Leakage for Closed USB Data Paths(6)	V_{SW}=0 ≤ USB, UART ≤ 3.6 V, /EN=GND, SEL[1:0]=GND and SEL1=GND, SEL0=V_{CC}	4.5	-0.5		0.5	µA
$I_{CL(AUD)}$	On-State Leakage for Closed(6) Audio Data Path	V_{SW}=0 ≤ LINOUT ≤ 3.0 V, SEL[1:0]=V_{CC}	4.5	-1		1	µA
I_{OFF}	Power-Off Leakage Current (USB, MHL, Audio Paths)	V_{SW}=0V or 3.6 V, Figure 6	0	-1		1	µA
$R_{ON(USB)}$	HS Switch On Resistance (USBDn to Dn Path)	V_{SW}=0.4V, I_{ON}=-8 mA, SEL[1:0]=GND, and SEL1=GND, SEL0=V_{CC} Figure 5	2.5 to 4.5		7		Ω
$R_{ON(MHL)}$	HS Switch On Resistance (MHL to D Path)	V_{SW}=V_{CC}-1050 mV, SEL0=GND, SEL1=V_{CC}, I_{ON}=-8 mA, Figure 5	2.5 to 4.5		5		Ω
$R_{ON(AUD)}$	Audio Switch On Resistance (LINOUT Path)	V_{SW}=-1.5V to 1.5V, SEL[1:0]=V_{CC}, I_{ON}=-24 mA, Figure 5	2.5 to 4.5		7		Ω
$R_{ON(UART)}$	UART Switch On Resistance (UART Path)	V_{SW}=0V to 3.6 V, SEL[1:0]=GND and SEL1=GND, SEL0=V_{CC}, I_{ON}=-8 mA, Figure 5	2.5 to 4.5		8.5		Ω
$\Delta R_{ON(MHL)}$	Difference in R_{ON} Between MHL Positive-Negative	V_{SW}=V_{CC}-1050 mV, SEL0=GND, SEL1=V_{CC}, I_{ON}=-8 mA, Figure 5,	2.5 to 4.5		0.03		Ω
$\Delta R_{ON(USB)}$	Difference in R_{ON} Between USB Positive-Negative	V_{SW}=0.4V, I_{ON}=-8 mA, SEL[1:0]=GND and SEL1=GND, SEL0=V_{CC}, Figure 5	2.5 to 4.5		0.18		Ω
$\Delta R_{ON(AUD)}$	Difference in R_{ON} Between LINOUT	V_{SW}=1.5 V, SEL[1:0]=V_{CC}, I_{ON}=-24 mA, Figure 5	2.5 to 4.5		0.1		Ω
$\Delta R_{ON(UART)}$	Difference in R_{ON} Between UART	V_{SW}=1.5 V, SEL[1:0]=GND, and SEL1=GND, SEL0=V_{CC}, I_{ON}=-8 mA, Figure 5	2.5 to 4.5		0.1		Ω

Continued on the following page...

DC Electrical Characteristics

All typical value are at T_A = 25°C unless otherwise specified.

Symbol	Parameter	Condition	V_{CC} (V)	T_A=-40°C to +85°C			Unit
				Min.	Typ.	Max.	
$R_{ONF(MHL)}$	Flatness for R_{ON} MHL Path	V_{SW}=1.65 to 3.45 V, SEL0=GND, SEL1=V_{CC}, I_{ON}=-8 mA, Figure 5	2.5 to 4.5		1		Ω
$R_{ONFA(AUDIO)}$	Flatness for R_{ON} Audio (LINOUT) Path	V_{SW}=-1.5 V to 1.5 V, SEL[1:0]=V_{CC}, I_{ON}=-24 mA, Figure 5	2.5 to 4.5		0.1		Ω
$R_{ONFT(UART)}$	Flatness for R_{ON} UART Path	V_{SW}=0 V to 3.6 V, SEL[1:0]=GND and SEL1=GND, SEL0=V_{CC}, I_{ON}=-8 mA, Figure 5	2.5 to 4.5		1.9		Ω
$R_{ONFD(USB)}$	Flatness for R_{ON} USB Path	V_{SW}=0V to 3.6 V, SEL[1:0]=GND and SEL1=GND, SEL0=V_{CC}, I_{ON}=-8 mA, Figure 5	2.5 to 4.5		1.9		Ω
R_{PD}	Internal Pull-Down Resistors on SEL0 & SEL1		2.5 to 4.5		3		MΩ
R_{SH}	Shunt Resistance		3.6		100	200	Ω
I_{CC}	Quiescent Current	V_{CNTRL}=0 or 4.5 V, I_{OUT}=0	4.5			30	µA
I_{CCZ}	Quiescent Current-High Impedance	$V_{/EN}$=4.5 V, I_{OUT}=0	4.5			1	µA
I_{CCT}	Delta Increase in Quiescent Current per Control Pin	V_{CNTRL}=1.65 V, I_{OUT}=0	4.5			10	µA
		V_{CNTRL}=2.5 V, I_{OUT}=0	4.5			5	

Note:

6. For this test, the data switch is closed with the respective switch pin floating.

AC Electrical Characteristics

All typical values are for V_{CC} = 3.3 V and T_A = 25°C unless otherwise specified.

Symbol	Parameter	Condition	V_{CC} (V)	T_A=-40°C to +85°C			Unit
				Min.	Typ.	Max.	
t_{ONUSB}	USB Turn-On Time, SEL[1:0] to Output	R_L=50 Ω, C_L=5 pF, $V_{SW(USB)}$=0.8 V, $V_{SW(MHL)}$=3.3 V, $V_{SW(AUD)}$=1.5V, $V_{SW(UART)}$=3.3 V, Figure 7, Figure 8	2.5 to 4.5		445	600	ns
t_{OFFUSB}	USB Turn-Off Time, SEL[1:0] to Output	R_L=50 Ω, C_L=5 pF, $V_{SW(USB)}$=0.8 V, $V_{SW(MHL)}$=3.3 V, $V_{SW(AUD)}$=1.5 V, $V_{SW(UART)}$=3.3 V, Figure 7, Figure 8	2.5 to 4.5		445	600	ns
t_{ONAUD}	Audio Turn-On Time, SEL[1:0] to Output	R_L=50 Ω, C_L=5 pF, $V_{SW(USB)}$=0.8 V, $V_{SW(MHL)}$=3.3 V, $V_{SW(AUD)}$=1.5 V, $V_{SW(UART)}$=3.3 V, Figure 7, Figure 8	2.5 to 4.5		445	600	ns
t_{OFFAUD}	Audio Turn-Off Time, SEL[1:0] to Output	R_L=50 Ω, C_L=5 pF, $V_{SW(USB)}$=0.8 V, $V_{SW(MHL)}$=3.3 V, $V_{SW(AUD)}$=1.5 V, $V_{SW(UART)}$=3.3 V, Figure 7, Figure 8	2.5 to 4.5		445	600	ns
t_{ONMHL}	MHL Turn-On Time, SEL[1:0] to Output	R_L=50 Ω to 3.3 V, C_L=5 pF, $V_{SW(USB)}$=0.8 V, $V_{SW(MHL)}$=3.3 V, $V_{SW(AUD)}$=1.5 V, $V_{SW(UART)}$=3.3 V, Figure 7, Figure 8	2.5 to 4.5		445	600	ns

AC Electrical Characteristics

All typical values are for V_{CC} = 3.3 V and T_A = 25°C unless otherwise specified.

Symbol	Parameter	Condition	V_{CC} (V)	T_A=-40°C to +85°C			Unit
				Min.	Typ.	Max.	
t_{OFFMHL}	MHL Turn-Off Time, SEL[1:0] to Output	R_L=50 Ω to 3.3 V, C_L=5 pF, $V_{SW(USB)}$=0.8 V, $V_{SW(MHL)}$=3.3 V, $V_{SW(AUD)}$=1.5 V, $V_{SW(UART)}$=3.3 V, Figure 7, Figure 8	2.5 to 4.5		445	600	ns
t_{ONUART}	UART Turn-On Time, SEL[1:0] to Output	R_L=5 kΩ, C_L=5 pF, $V_{SW(USB)}$=0.8 V, $V_{SW(MHL)}$=3.3 V, $V_{SW(AUD)}$=1.5 V, $V_{SW(UART)}$=3.3 V, Figure 7, Figure 8	2.5 to 4.5		445	600	ns
$t_{OFFUART}$	UART Turn-Off Time, SEL[1:0] to Output	R_L=5 kΩ, C_L=5 pF, $V_{SW(USB)}$=0.8 V, $V_{SW(MHL)}$=3.3 V, $V_{SW(AUD)}$=1.5 V, $V_{SW(UART)}$=3.3 V, Figure 7, Figure 8	2.5 to 4.5		445	600	ns
t_{ENABLE}	Enable Turn-On Time, /EN to Output	R_L=50 Ω, C_L=5 pF, $V_{SW(USB)}$=0.8 V, $V_{SW(MHL)}$=3.3 V, $V_{SW(AUD)}$=1.5 V, $V_{SW(UART)}$=3.3 V, Figure 7, Figure 8	2.5 to 4.5		70		µs
$t_{DISABLE}$	Disable Turn-Off Time, /EN to Output	R_L=50 Ω, C_L=5 pF, $V_{SW(USB)}$=0.8 V, $V_{SW(MHL)}$=3.3 V, $V_{SW(AUD)}$=1.5 V, $V_{SW(UART)}$=3.3 V, Figure 7, Figure 8	2.5 to 4.5		35		ns
t_{PD}	Propagation Delay(7)	C_L=5 pF, R_L=50 Ω, Figure 7, Figure 9	2.5 to 4.5		0.25		ns
t_{BBM}	Break-Before-Make(7)	R_L=50 Ω, C_L=5 pF, V_{AUD}=1.5 V, V_{MHL}=3.3 V, V_{USB}=0.8 V, V_{UART}=3.3 V, Figure 11	2.5 to 4.5	50	120	425	ns
$O_{IRR(MHL)}$	Off Isolation(7)	V_S=1 V_{pk-pk}, R_L=50 Ω, f=240 MHz, Figure 13	2.5 to 4.5		-36		dB
$O_{IRR(USB)}$		V_S=400 mV_{pk-pk}, R_L=50 Ω, f=240 MHz, Figure 13	2.5 to 4.5		-38		dB
$O_{IRR(UART)}$		V_S=3.6 V_{pk-pk}, R_L=50 Ω, f=10 MHz, Figure 13	2.5 to 4.5		-38		dB
$Xtalk_{MHL}$	Non-Adjacent Channel Crosstalk(7)	V_S=1 V_{pk-pk}, R_L=50 Ω, f=240 MHz, Figure 14	2.5 to 4.5		-44		dB
$Xtalk_{USB}$		V_S=400 mV_{pk-pk}, R_L=50 Ω, f=240 MHz, Figure 14	2.5 to 4.5		-32		dB
$Xtalk_{AUD}$		V_S=100 mV_{RMS}, R_L=32 Ω, f=20 kHz, Figure 14	2.5 to 4.5		-70		dB
$Xtalk_{UART}$		V_S=400 mV_{pk-pk}, R_L=50 Ω, f=10 MHz, Figure 14	2.5 to 4.5		-70		dB
THD	Total Harmonic Distortion - LINOUT	R_T=600 Ω, V_{SW}=2 V_{pk-pk}, f=20 Hz to 20 kHz, V_{BIAS}=0 V	2.5 to 4.5		0.01		%
BW	S_{DD21} Differential - 3db Bandwidth(7)	V_{IN}=1 V_{pk-pk}, Common Mode Voltage=V_{CC} –1.1 V, MHL Path, R_L=50 Ω, C_L=0 pF, Figure 12	2.5 to 4.5		1.9		GHz
		V_{IN}=400 mV_{pk-pk}, Common Mode Voltage=0.2 V, USB Path, R_L=50 Ω, C_L=0 pF, Figure 12			640(8)		MHz
	Single Ended	Audio Path, R_L=50 Ω, C_L=0 pF		5			MHz

Note:
7. Guaranteed by characterization.
8. Passed USB 2.0 Compliant Test

USB High-Speed AC Electrical Characteristics

Typical values are at T_A = 25ºC and V_{CC} = 3.0 to 3.6 V.

Symbol	Parameter	Condition	Typ.	Unit
$t_{SK(P)}$	Skew of Opposite Transitions of the Same Output[9]	C_L=5 pF, R_L=50 Ω, Figure 10	3	ps
t_J	Total Jitter[9]	R_L=50 Ω, C_L=5 pf, t_R=t_F=500 ps (10-90%) at 480 Mbps, PN7	26	ps

Note:
9. Guaranteed by characterization.

MHL™ AC Electrical Characteristics

Typical values are at T_A = 25ºC and V_{CC} = 3.0 to 3.6 V.

Symbol	Parameter	Condition	Typ.	Unit
$t_{SK(P)}$	Skew of Opposite Transitions of the Same Output[10]	R_{PU}=50 Ω to V_{CC}, C_L=0 pF	3	ps
t_J	Total Jitter[10]	f=2.25 Gbps, PN7, R_{PU}=50 Ω to V_{CC}, C_L=0 pF	18	ps

Note:
10. Guaranteed by characterization.

Capacitance

Typical values are at T_A = 25ºC.

Symbol	Parameter	Condition	Typ.	Unit
C_{IN}	Control Pin Input Capacitance[11]	V_{CC}=0 V, f=1 MHz	2.5	pF
$C_{ON(USB)}$	USB Path On Capacitance[11]	V_{CC}=3.3 V, f=240 MHz, Figure 16	7.5	
$C_{OFF(USB)}$	USB Path Off Capacitance[11]	V_{CC}=3.3 V, f=240 MHz, Figure 15	2.5	
$C_{ON(MHL)}$	MHL Path On Capacitance[11]	V_{CC}=3.3 V, f=240 MHz, Figure 16	4.2	
$C_{OFF(MHL)}$	MHL Path Off Capacitance[11]	V_{CC}=3.3 V, f=240 MHz, Figure 15	2.5	
$C_{ON(AUD)}$	Audio Path On Capacitance[11]	V_{CC}=3.3 V, f=1 MHz, Figure 16	7.0	pF
$C_{OFF(AUD)}$	Audio Path Off Capacitance[11]	V_{CC}=3.3 V, f=1 MHz, Figure 15	3.5	
$C_{ON(UART)}$	UART Path On Capacitance[11]	V_{CC}=3.3 V, f=1 MHz, Figure 16	8.0	pF
$C_{OFF(UART)}$	UART Path Off Capacitance[11]	V_{CC}=3.3 V, f=1 MHz, Figure 15	3.0	

Note:
11. Guaranteed by characterization.

Test Diagrams

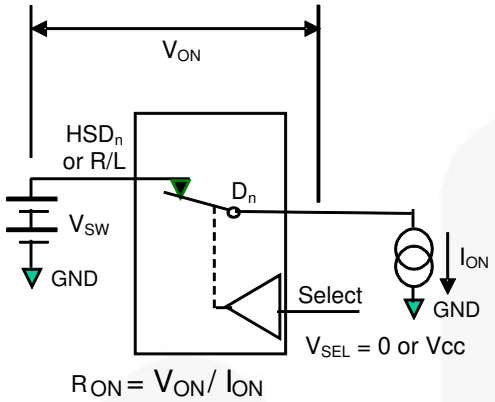

Figure 5. On Resistance

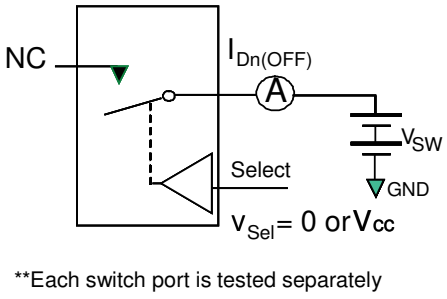

Figure 6. Off Leakage

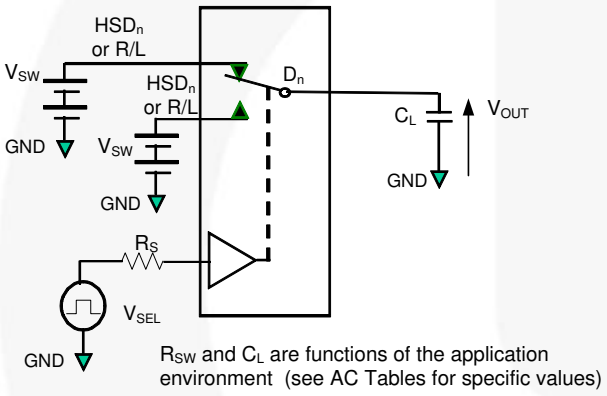

Figure 7. AC Test Circuit Load

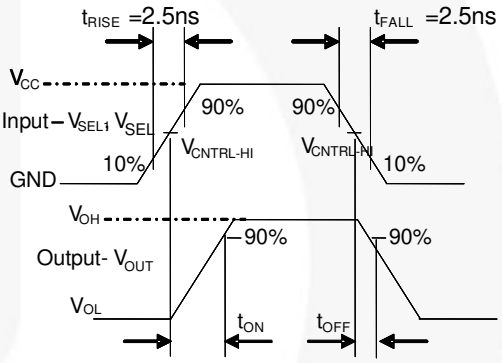

Figure 8. Turn-On / Turn-Off Waveforms

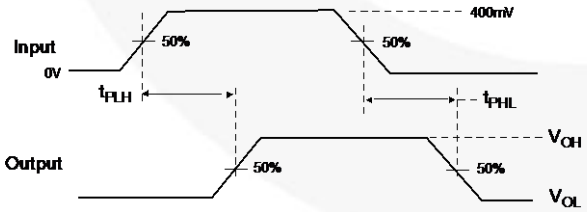

Figure 9. Propagation Delay ($t_R t_F$ – 500 ps)

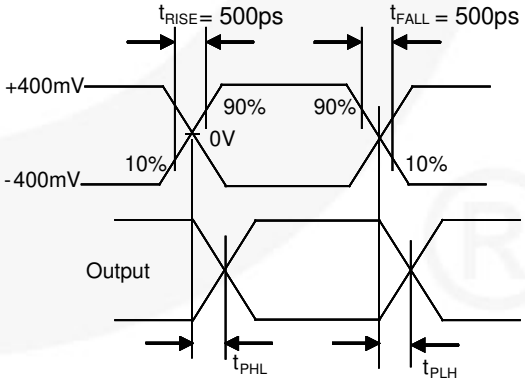

Figure 10. Intra-Pair Skew Test $t_{SK(P)}$

Note:

12. HSD_n refers to the high-speed data USB or MHL paths.

Test Diagrams (Continued)

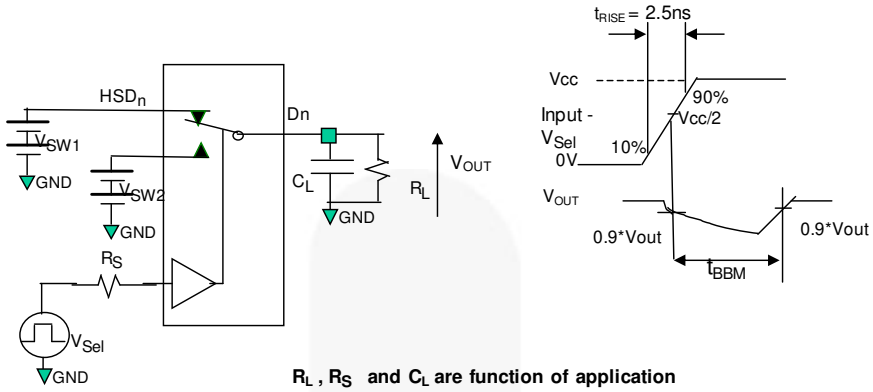

R_L , R_S and C_L are function of application environment (see AC Tables for specific values)
C_L includes test fixture and stray capacitance

Figure 11. Break-Before-Make Interval Timing

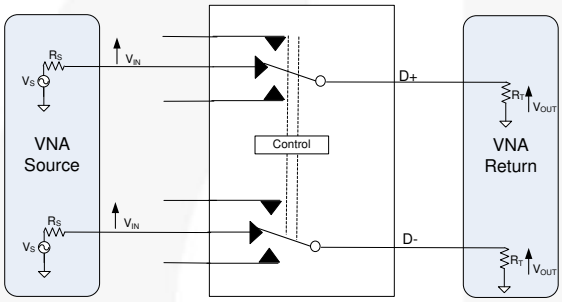

V_S, R_S and R_T are functions of the application environment (see AC/DC Tables for values).

Figure 12. Insertion Loss (SDD21)

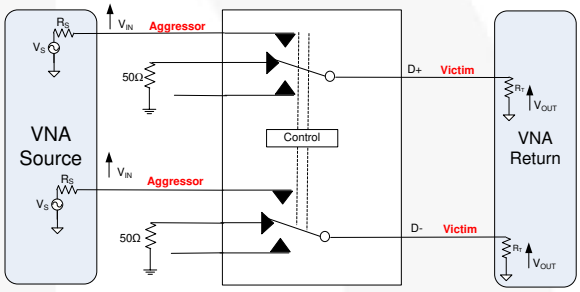

V_S, R_S and R_T are functions of the application environment (see AC/DC Tables for values).
Off Isolation = 20 Log (V_{OUT} - V_{IN})

Figure 13. Channel Off Isolation (SDD21)

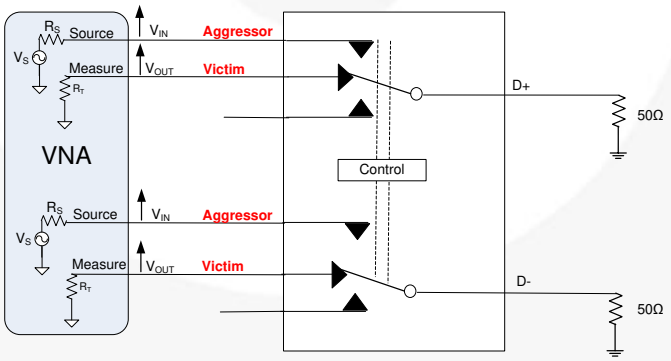

VS, RS and RT are functions of the application environment (see AC/DC Tables for values).
Off Isolation = 20 Log (VOUT - VIN)

Figure 14. Non-Adjacent Channel-to-Channel Crosstalk (SDD21)

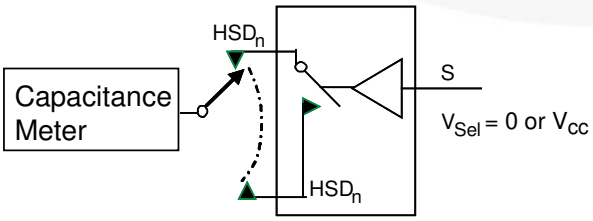

Figure 15. Channel Off Capacitance

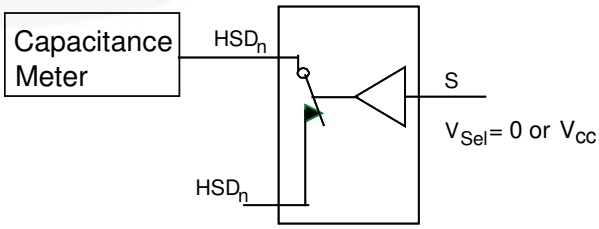

Figure 16. Channel On Capacitance

Functional Description

Insertion Loss

One of the key advantages of using the FSA3041 in mobile digital video applications is the small amount of insertion loss experienced by the received signal as it passes through the switch. This results in minimal degradation to the received eye. One of the ways to measure the quality of the high data rate channels is using balanced ports and four-port differential S-parameter analysis, particularly SDD21.

Bandwidth is measured using the S-parameter SDD21 methodology.

Typical Applications

Figure 19 shows the FSA3041 utilizing the V_{BAT} connection. The 3 MΩ resistors are used to ensure, for manufacturing test via the micro-USB connector, that the FSA3041 configures for connectivity to the baseband or application processor.

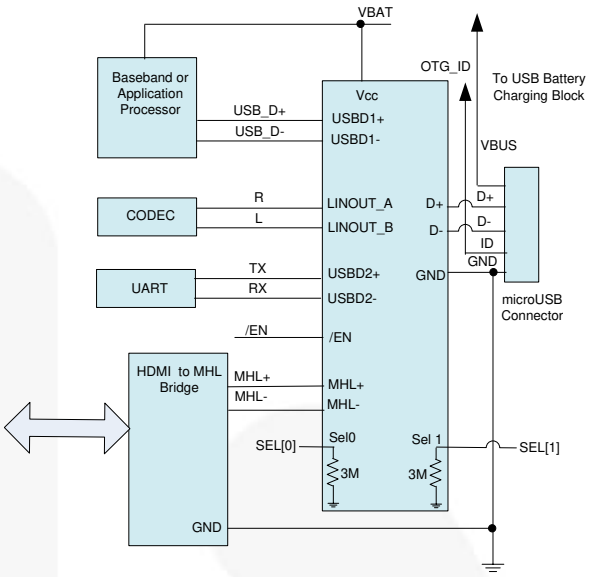

Figure 19. Typical Application

Figure 17. MHL Path SDD21 Insertion Loss Curve

Figure 18. USB Path SDD21 Insertion Loss Curve

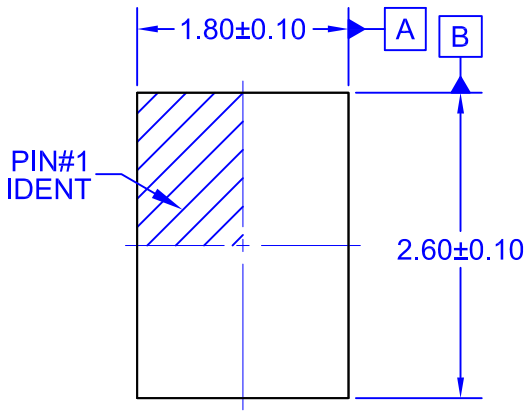

TOP VIEW

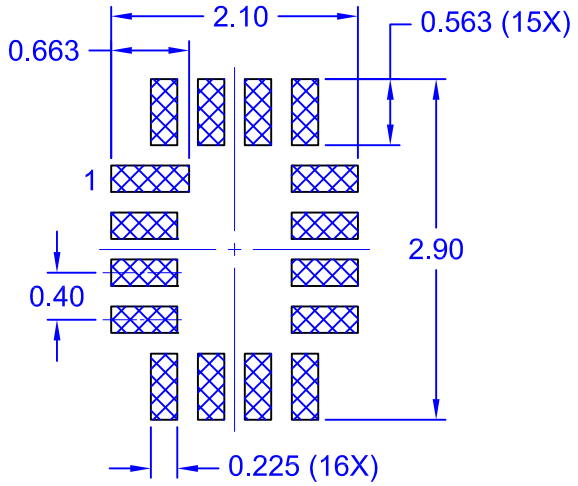

RECOMMENDED
LAND PATTERN

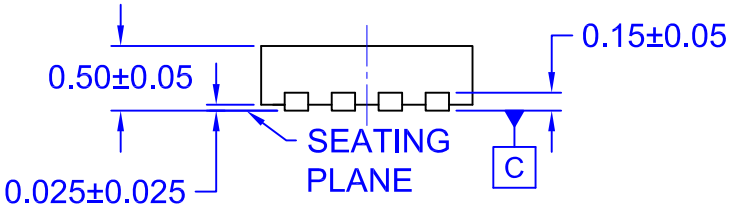

SIDE VIEW

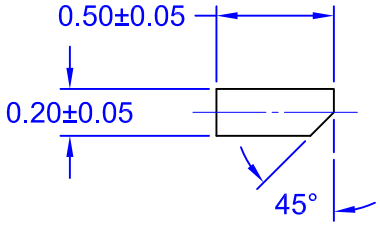

DETAIL A
SCALE 2:1

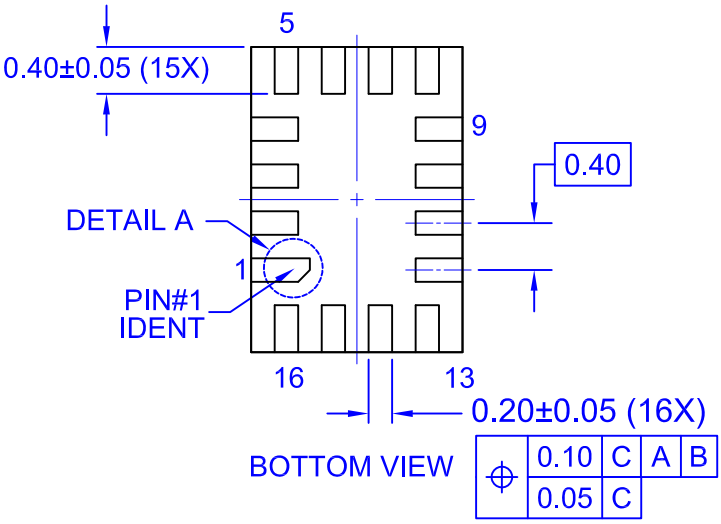

BOTTOM VIEW

LEAD SHAPE AT PACKAGE EDGE

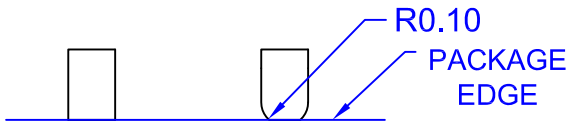

LEAD
OPTION 1
SCALE 2:1

LEAD
OPTION 2
SCALE 2:1

NOTES:

A. PACKAGE DOES NOT FULLY CONFORM TO JEDEC STANDARD.

B. DIMENSIONS ARE IN MILLIMETERS.

C. LAND PATTERN RECOMMENDATION IS EXISTING INDUSTRY LAND PATTERN.

D DRAWING FILENAME: MKT-UMLP16ArevG.

E. TERMINAL SHAPE MAY VARY ACCORDING TO PACKAGE SUPPLIER, SEE TERMINAL SHAPE VARIANTS.

ON Semiconductor

PUBLICATION ORDERING INFORMATION

LITERATURE FULFILLMENT:
Literature Distribution Center for ON Semiconductor
19521 E. 32nd Pkwy, Aurora, Colorado 80011 USA
Phone: 303−675−2175 or 800−344−3860 Toll Free USA/Canada
Fax: 303−675−2176 or 800−344−3867 Toll Free USA/Canada
Email: orderlit@onsemi.com

N. American Technical Support: 800−282−9855 Toll Free USA/Canada
Europe, Middle East and Africa Technical Support:
Phone: 421 33 790 2910
Japan Customer Focus Center
Phone: 81−3−5817−1050

ON Semiconductor Website: **www.onsemi.com**

Order Literature: http://www.onsemi.com/orderlit

For additional information, please contact your local Sales Representative