Chipsmall Limited consists of a professional team with an average of over 10 year of expertise in the distribution of electronic components. Based in Hongkong, we have already established firm and mutual-benefit business relationships with customers from,Europe,America and south Asia,supplying obsolete and hard-to-find components to meet their specific needs.

With the principle of “Quality Parts,Customers Priority,Honest Operation,and Considerate Service”,our business mainly focus on the distribution of electronic components. Line cards we deal with include Microchip,ALPS,ROHM,Xilinx,Pulse,ON,Everlight and Freescale. Main products comprise IC,Modules,Potentiometer,IC Socket,Relay,Connector.Our parts cover such applications as commercial,industrial, and automotives areas.

We are looking forward to setting up business relationship with you and hope to provide you with the best service and solution. Let us make a better world for our industry!

Contact us

Tel: +86-755-8981 8866 Fax: +86-755-8427 6832
Email & Skype: info@chipsmall.com Web: www.chipsmall.com
Address: A1208, Overseas Decoration Building, #122 Zhenhua RD., Futian, Shenzhen, China

Apr.1.2017 Copyright 2017 HIROSE ELECTRIC CO., LTD. All Rights Reserved.

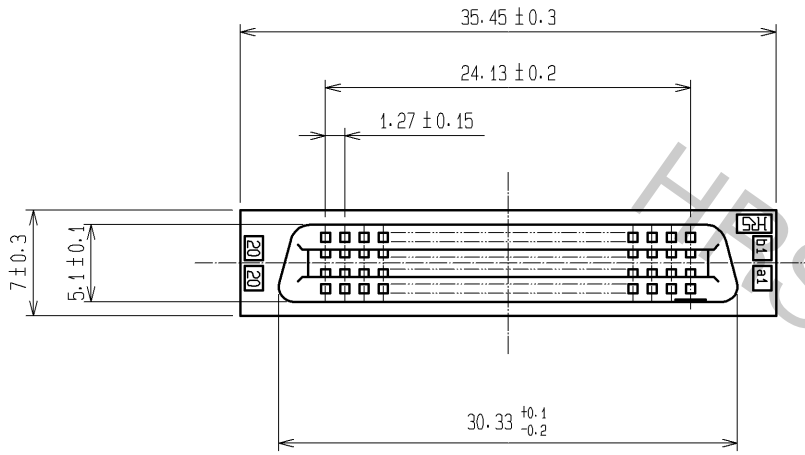

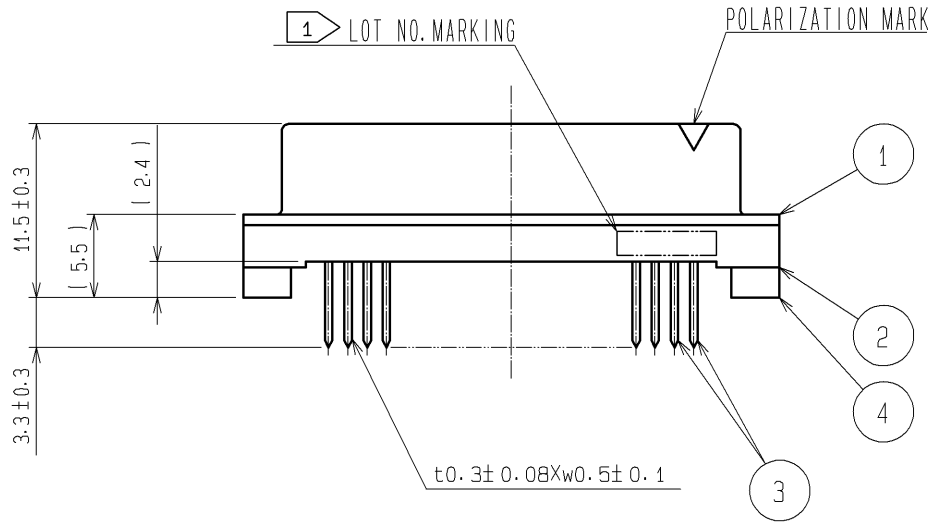

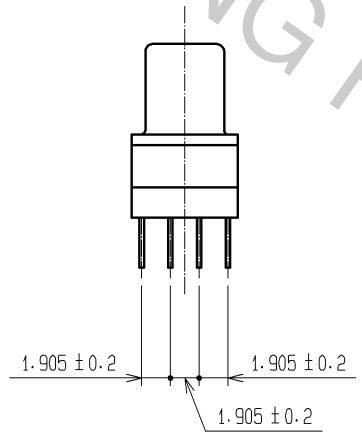

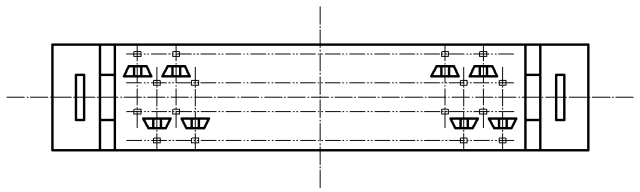

RECOMMENDED PC BOARD HOLE PATTERN
(MOUNTING SIDE) t=1.6

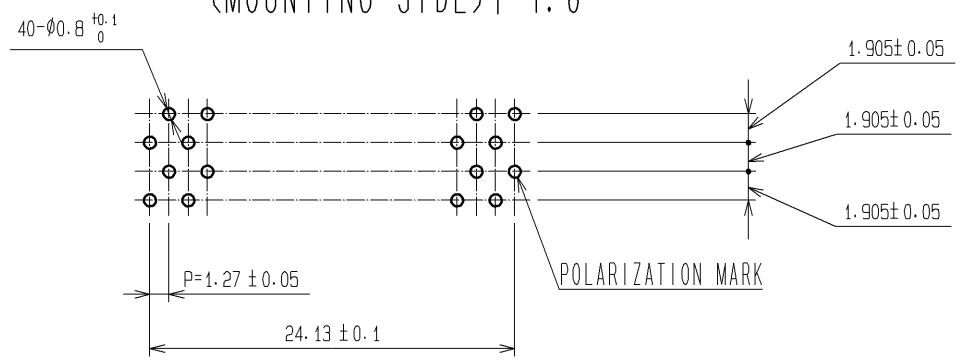

HRS DRAWING FOR REFERENCE

NOTES 1 LOT NO. MARKING SIDE SHALL BE OPTIONAL.
2. THE DIMENSIONS IN PARENTHESES ARE FOR REFERENCE.

NO.	MATERIAL	FINISH , REMARKS
1, 2, 4	POLYAMIDE	BLACK , UL94V-0

NO.	MATERIAL	FINISH , REMARKS
3	PHOSPHOR BRONZE	CONTACT AREA : GOLD 0.2μm min. DIP AREA : TIN-PLATING 2μm min. UNDER PLATING : NICKEL 2μm min.

UNITS	SCALE	COUNT	DESCRIPTION OF REVISIONS	DESIGNED	CHECKED	DATE
mm	2 : 1					

HIROSE ELECTRIC CO., LTD.

APPROVED	: HS. OKAWA	07. 08. 10	DRAWING NO.	EDC3-083213-21
CHECED	: HS. OZAWA	07. 08. 10	PART NO.	FX2C2-40S-1.27DSA(71)
DESIGNED	: KY. NAKAMURA	07. 08. 10	CODE NO.	CL572-2423-0-71
DRAWN	: TP. MATSUMOTO	07. 08. 08		1/1

FORM NO. 229-1