Chipsmall Limited consists of a professional team with an average of over 10 year of expertise in the distribution of electronic components. Based in Hongkong, we have already established firm and mutual-benefit business relationships with customers from,Europe,America and south Asia,supplying obsolete and hard-to-find components to meet their specific needs.

With the principle of “Quality Parts,Customers Priority,Honest Operation,and Considerate Service”,our business mainly focus on the distribution of electronic components. Line cards we deal with include Microchip,ALPS,ROHM,Xilinx,Pulse,ON,Everlight and Freescale. Main products comprise IC,Modules,Potentiometer,IC Socket,Relay,Connector.Our parts cover such applications as commercial,industrial, and automotives areas.

We are looking forward to setting up business relationship with you and hope to provide you with the best service and solution. Let us make a better world for our industry!

Contact us

Tel: +86-755-8981 8866 Fax: +86-755-8427 6832
Email & Skype: info@chipsmall.com Web: www.chipsmall.com
Address: A1208, Overseas Decoration Building, #122 Zhenhua RD., Futian, Shenzhen, China

THIS COPY IS PROVIDED ON A RESTRICTED BASIS AND IS NOT TO BE USED IN ANY WAY DETRIMENTAL TO THE INTERESTS OF PANDUIT CORP.

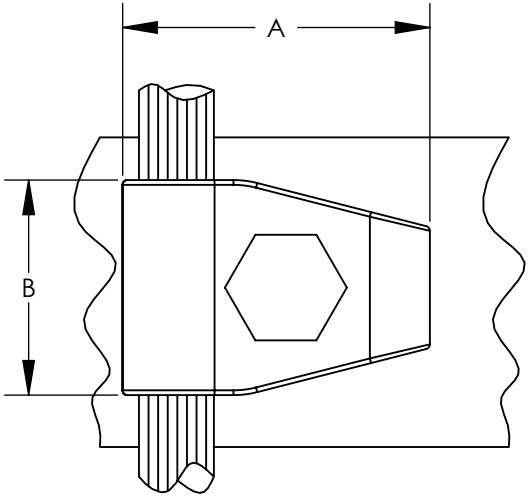

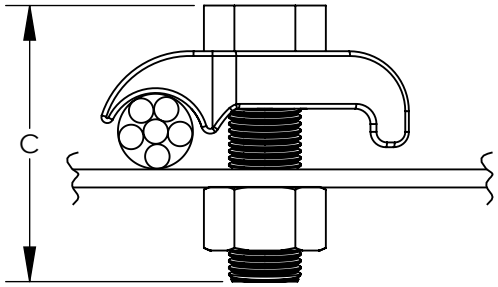

C UL US
467
LISTED
SUITABLE FOR
DIRECT BURIAL

NOTES:

1. MADE FROM HIGH COPPER CONTENT ALLOY. FURNISHED WITH FULL THREADED SILICON BOLT, NUTS, AND LOCKWASHERS.
2. THESE CONNECTORS ARE UL LISTED FOR GROUNDING AND BONDING, AND DIRECT BURIAL APPLICATIONS.
3. SEE www.PANDUIT.com FOR PACKAGE QUANTITIES.

PANDUIT PART NUMBER	CONDUCTOR RANGE	DIMENSIONS +/-.1 [2.5]						BOLT DIA.
		A		B		C		
		IN	MM	IN	MM	IN	MM	
GMS-1-X	8 SOL. - 4 STR.	1.25	32	1.00	25	1.63	41	0.38
GMS-2-Q	4 SOL. - 2/0 STR	1.63	41	1.13	28	1.75	44	0.38
GMS-3-Q	2/0 SOL. - 250 kcmil	2.13	54	1.50	38	2.00	51	0.50

REV	DATE	BY	CHK	APR	DESCRIPTION	ECN
05	11/15	JHNU	JHNU	RGB	REVISED WIRE RANGE FOR GMS-3-Q: 2/0 SOL WAS 2/0 STR	N41170BA-C41170

TITLE
BRONZE GROUND CLAMP
GMS SERIES
CUSTOMER DRAWING

ITEM REVISION NAME: N41170BA/05

DATASET FILE NAME: N41170BA-C41170/05.SLDDRW

PANDUIT

UNLESS OTHERWISE SPECIFIED,
DIMENSIONAL TOLERANCES ARE: IN [mm]
.X ± .XXX ±
.XX ± ANGLES ±

THIRD ANGLE PROJECTION

MATERIAL: SEE NOTES

DRAWING NUMBER: C41170

DRAWN BY	DATE	CHK	SCALE	SHEET 1 OF 1	SIZE
ED	10/95	WJB	N/A		A