Chipsmall Limited consists of a professional team with an average of over 10 year of expertise in the distribution of electronic components. Based in Hongkong, we have already established firm and mutual-benefit business relationships with customers from,Europe,America and south Asia,supplying obsolete and hard-to-find components to meet their specific needs.

With the principle of “Quality Parts,Customers Priority,Honest Operation,and Considerate Service”,our business mainly focus on the distribution of electronic components. Line cards we deal with include Microchip,ALPS,ROHM,Xilinx,Pulse,ON,Everlight and Freescale. Main products comprise IC,Modules,Potentiometer,IC Socket,Relay,Connector.Our parts cover such applications as commercial,industrial, and automotives areas.

We are looking forward to setting up business relationship with you and hope to provide you with the best service and solution. Let us make a better world for our industry!

Contact us

Tel: +86-755-8981 8866 Fax: +86-755-8427 6832
Email & Skype: info@chipsmall.com Web: www.chipsmall.com
Address: A1208, Overseas Decoration Building, #122 Zhenhua RD., Futian, Shenzhen, China

THIS COPY IS PROVIDED ON A RESTRICTED BASIS AND IS NOT TO BE USED IN ANY WAY DETRIMENTAL TO THE INTERESTS OF PANDUIT CORP.

NOTES:

1. MATERIAL:
   BODY - BRONZE (GUN METAL)
   SCREW - STEEL, ZINC PLATED
2. PARTS ARE cULus LISTED TO UL467 AS GROUNDING & BONDING EQUIPMENT.
3. SEE WWW.PANDUIT.COM FOR PART NUMBER SUFFIX DESIGNATION FOR PACKAGE SIZE.

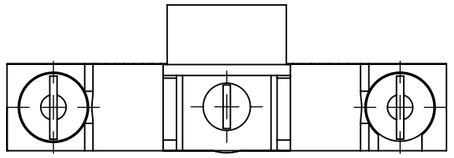

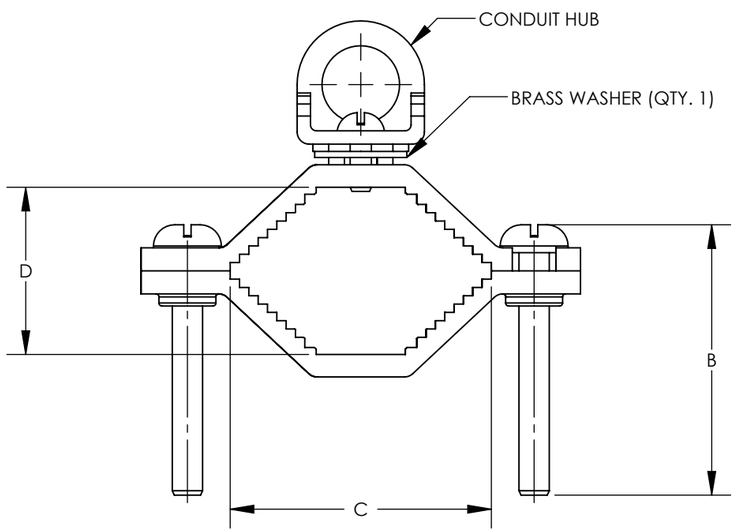

PART NUMBER	CONDUIT HUB SIZE	DIMENSIONS IN [mm] +/- .05 [1.3]			DESCRIPTION	WATER PIPE	GROUNDING WIRE
		B	C	D			
GPC4-1-12	1/2"	1.65 [41.9]	1.00 [25.4]	0.56 [14.2]	GROUND CLAMP FOR RIGID CONDUIT WITH 1/2 HUB	1/2" - 1"	8 - 4 STR
GPC4-1-34	3/4"	1.65 [41.9]	1.00 [25.4]	0.56 [14.2]	GROUND CLAMP FOR RIGID CONDUIT WITH STEEL SCREWS 3/4 HUB	1/2" - 1"	8 - 4 STR
GPC4-1-1	1"	1.65 [41.9]	1.00 [25.4]	0.56 [14.2]	GROUND CLAMP FOR RIGID CONDUIT WITH STEEL SCREWS 1HUB	1/2" - 1"	8 - 4 STR
GPC4-2-12	1/2"	2.22 [56.4]	2.08 [52.8]	1.33 [33.8]	GROUND CLAMP FOR RIGID CONDUIT WITH 1/2 HUB	1-1/4" - 2"	8 - 4 STR
GPC4-2-34	3/4"	2.22 [56.4]	2.08 [52.8]	1.33 [33.8]	GROUND CLAMP FOR RIGID CONDUIT WITH STEEL SCREWS 3/4 HUB	1-1/4" - 2"	8 - 4 STR
GPC4-2-1	3/4"	2.22 [56.4]	2.08 [52.8]	1.33 [33.8]	GROUND CLAMP FOR RIGID CONDUIT WITH STEEL SCREWS 1HUB	1-1/4" - 2"	8 - 4 STR
GPC4-4-12	1/2"	4.25 [108.0]	3.81 [96.8]	2.75 [69.9]	GROUND CLAMP FOR RIGID CONDUIT WITH 1/2 HUB	2-1/2" - 4"	8 - 4 STR
GPC4-4-34	3/4"	4.25 [108.0]	3.81 [96.8]	2.75 [69.9]	GROUND CLAMP FOR RIGID CONDUIT WITH 3/4 HUB	2-1/2" - 4"	8 - 4 STR
GPC4-4-1	1"	4.25 [108.0]	3.81 [96.8]	2.75 [69.9]	GROUND CLAMP FOR RIGID CONDUIT WITH 1HUB	2-1/2" - 4"	8 - 4 STR
GPC4-6-12	1/2"	5.20 [132.1]	6.00 [152.4]	2.90 [73.7]	GROUND CLAMP FOR RIGID CONDUIT WITH 1/2 HUB	4-1/2" - 6"	8 - 4 STR
GPC4-6-34	3/4"	5.20 [132.1]	6.00 [152.4]	2.90 [73.7]	GROUND CLAMP FOR RIGID CONDUIT WITH 1/2 HUB	4-1/2" - 6"	8 - 4 STR
GPC4-6-1	1"	5.20 [132.1]	6.00 [152.4]	2.90 [73.7]	GROUND CLAMP FOR RIGID CONDUIT WITH STEEL SCREWS 1HUB	4-1/2" - 6"	8 - 4 STR

REV	DATE	BY	CHK	APR	DESCRIPTION	ECN
01	8/12	JHNU	SRBI	RGB	REVISED P/N'S: GPC4-1-12 WAS GPC6-1-12, GPC4-1-34 WAS GPC6-1-34, GPC4-1-1 WAS GPC6-1-1, GPC4-2-12 WAS GPC6-2-12, GPC4-2-34 WAS GPC6-2-34, GPC4-2-1 WAS GPC6-2-1, GPC4-4-12 WAS GPC6-4-12, GPC4-4-34 WAS GPC6-4-34, GPC4-4-1 WAS GPC 6-4-1, GPC4-6-12 WAS GPC6-6-12, GPC4-6-34 WAS GPC6-6-34, GPC4-6-1 WAS GPC6-6-1	10J018AK-JC
00	7/12	JHNU	SRBI	RGB	DRAWING RELEASED	10J018AK-JC

TITLE
BRONZE GROUND PIPE CLAMP CUSTOMER DRAWING

ITEM REVISION NAME: 10J018AK/01

DATASET FILE NAME: 10J018AK-JC/01.SLDDRW

UNLESS OTHERWISE SPECIFIED, DIMENSIONAL TOLERANCES ARE: IN [mm]
.X ± .XXX ±
.XX ± ANGLES ±

THIRD ANGLE PROJECTION

MATERIAL: SEE NOTES

DRAWING NUMBER: 10J018AK-JC

DRAWN BY	DATE	CHK	SCALE	SHEET	SIZE
JHNU	7/12	SRBI	N/A	SHEET 1 OF 1	B