Chipsmall Limited consists of a professional team with an average of over 10 year of expertise in the distribution of electronic components. Based in Hongkong, we have already established firm and mutual-benefit business relationships with customers from,Europe,America and south Asia,supplying obsolete and hard-to-find components to meet their specific needs.

With the principle of “Quality Parts,Customers Priority,Honest Operation,and Considerate Service”,our business mainly focus on the distribution of electronic components. Line cards we deal with include Microchip,ALPS,ROHM,Xilinx,Pulse,ON,Everlight and Freescale. Main products comprise IC,Modules,Potentiometer,IC Socket,Relay,Connector.Our parts cover such applications as commercial,industrial, and automotives areas.

We are looking forward to setting up business relationship with you and hope to provide you with the best service and solution. Let us make a better world for our industry!

Contact us

Tel: +86-755-8981 8866 Fax: +86-755-8427 6832
Email & Skype: info@chipsmall.com Web: www.chipsmall.com
Address: A1208, Overseas Decoration Building, #122 Zhenhua RD., Futian, Shenzhen, China

THIS COPY IS PROVIDED ON A RESTRICTED BASIS AND IS NOT TO BE USED IN ANY WAY DETRIMENTAL TO THE INTERESTS OF PANDUIT CORP.

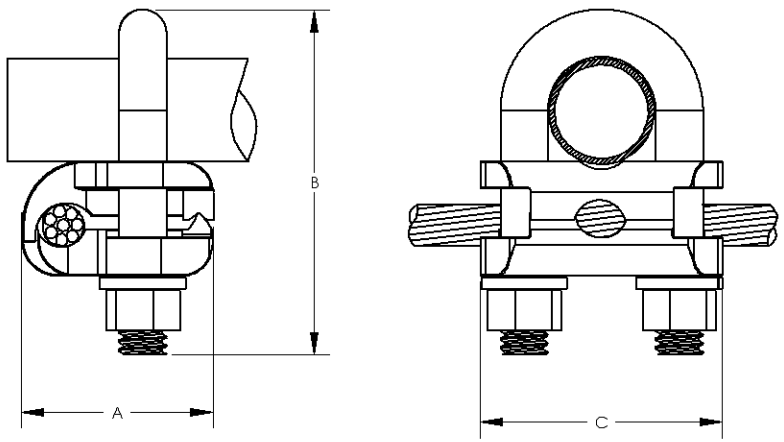

PANDUIT PART NUMBER	ACCOMODATES		CONDUCTOR RANGE	DIMENSIONS - IN [mm]						BOLT DIA
	ROD DIA	NOMINAL PIPE SIZE (IPS)		A		B		C		
				IN	MM	IN	MM	IN	MM	
GPL-4-Q	5/8" OR 3/4"	3/8"	#8 SOL - #4 STR	1.38	34	2.75	70	2.00	51	0.38
GPL-5-Q	5/8" OR 3/4"	3/8"	# 4 SOL - 2/0 STR	1.63	41	2.75	70	2.00	51	0.38
GPL-6-Q	5/8" OR 3/4"	3/8"	2/0 SOL - 250 kcmil	1.88	47	2.75	70	2.00	51	0.38
GPL-8-Q	7/8" OR 1"	1/2" OR 3/4"	# 8 SOL - #4 STR	1.38	34	2.63	67	2.38	60	0.38
GPL-9-Q	7/8" OR 1"	1/2" OR 3/4"	#4 SOL - 2/0 STR	1.63	41	2.63	67	2.38	60	0.38
GPL-10-Q	7/8" OR 1"	1/2" OR 3/4"	2/0 SOL - 250 kcmil	1.88	47	3.00	76	2.38	60	0.38
GPL-14-X	-----	1"	#8 SOL - #4 STR	1.38	34	2.75	70	2.63	67	0.38
GPL-15-X	-----	1"	# 4 SOL - 2/0 STR	1.63	41	2.75	70	2.63	67	0.38
GPL-16-X	-----	1"	2/0 SOL - 250 kcmil	1.88	47	3.25	82	2.63	67	0.38
GPL-20-X	-----	1-1/4"	#8 SOL - #4 STR	1.38	34	3.50	89	3.00	76	0.38
GPL-21-X	-----	1-1/4"	# 4 SOL - 2/0 STR	1.63	41	3.50	89	3.00	76	0.38
GPL-22-X	-----	1-1/4"	2/0 SOL - 250 kcmil	1.88	47	3.50	89	3.00	76	0.38
GPL-26-X	-----	1-1/2"	#8 SOL - #4 STR	1.38	34	4.00	102	3.25	82	0.38
GPL-27-X	-----	1-1/2"	# 4 SOL - 2/0 STR	1.63	41	4.00	102	3.25	82	0.38
GPL-28-X	-----	1-1/2"	2/0 SOL - 250 kcmil	1.88	47	4.00	102	3.25	82	0.38
GPL-32-3	-----	2"	#8 SOL - #4 STR	1.38	34	4.25	108	3.75	95	0.38
GPL-33-3	-----	2"	# 4 SOL - 2/0 STR	1.63	41	4.25	108	3.75	95	0.38
GPL-34-3	-----	2"	2/0 SOL - 250 kcmil	1.88	47	4.25	108	3.75	95	0.38
GPL-39-3	-----	2-1/2"	# 4 SOL - 2/0 STR	1.63	41	5.00	127	4.25	108	0.38
GPL-40-3	-----	2-1/2"	2/0 SOL - 250 kcmil	1.88	47	5.00	127	4.25	108	0.38
GPL-44-1	-----	3"	#8 SOL - #4 STR	1.38	34	5.50	140	4.75	121	0.38
GPL-45-1	-----	3"	# 4 SOL - 2/0 STR	1.63	41	5.50	140	4.75	121	0.38
GPL-46-1	-----	3"	2/0 SOL - 250 kcmil	1.88	47	5.50	140	4.75	121	0.38
GPL-51-1	-----	3-1/2"	# 4 SOL - 2/0 STR	1.63	41	6.25	158	5.25	133	0.38
GPL-52-1	-----	3-1/2"	2/0 SOL - 250 kcmil	1.88	47	6.25	158	5.25	133	0.38
GPL-57-1	-----	4"	# 4 SOL - 2/0 STR	1.63	41	6.38	161	5.75	146	0.38
GPL-58-1	-----	4"	2/0 SOL - 250 kcmil	1.88	47	6.38	161	5.75	146	0.38

NOTES:

1. MADE FROM HIGH COPPER CONTENT ALLOY. FURNISHED WITH FULL THREADED SILICON BOLT, NUTS, AND LOCKWASHERS
2. THESE CONNECTORS ARE UL LISTED FOR GROUNDING AND BONDING, AND DIRECT BURIAL APPLICATIONS
3. PKG QTY: -Q = 25
   -X = 10

C UL US
467
LISTED
SUITABLE FOR
DIRECT BURIAL

REV	DATE	BY	CHK	DESCRIPTION	ECN	PM	CUST
05	12/08	JHNU	JHNU	ADDED PACKAGING CODE TO PART NUMBERS			
04	10/08	JHNU	JHNU	REVISED UL SYMBOL CONVERTED DRAWING TO SOLIDWORKS			
03	11/02	CJW		ADDED GPL-16-X, GPL-44-1, GPL-52-1, ADDED NEW UL SYMBOL REVISED MCM TO kcmil			
02	2/01	SAB	SKB	ADDED ALL PACKAGING CODES AND NOTE 3	09328		JAC
01	2/98	TM	WJB	UPDATED CHART	06659	DH	LA
00	10/95	ED	RS	DRAWING RELEASED	03704	DH	LA

PANDUIT CORP. TINLEY PARK, ILLINOIS

BRONZE GROUND CLAMP CONNECTOR - GPL SERIES
CUSTOMER DRAWING

UNLESS OTHERWISE SPECIFIED DIMENSIONAL TOLERANCES ARE:
(.X) ± (.XXX) ±
(.XX) ± ANGLES ±

UNLESS OTHERWISE SPECIFIED, ALL DIMENSIONS ARE GIVEN IN INCHES, THIRD ANGLE PROJECTION

DRAWN BY ED
DATE 10/95
CHK'D
MAT'L:
SCALE NONE
DRAWING NO / CAD FILE C41168_05
DWG SIZE B