Chipsmall Limited consists of a professional team with an average of over 10 year of expertise in the distribution of electronic components. Based in Hongkong, we have already established firm and mutual-benefit business relationships with customers from,Europe,America and south Asia,supplying obsolete and hard-to-find components to meet their specific needs.

With the principle of “Quality Parts,Customers Priority,Honest Operation,and Considerate Service”,our business mainly focus on the distribution of electronic components. Line cards we deal with include Microchip,ALPS,ROHM,Xilinx,Pulse,ON,Everlight and Freescale. Main products comprise IC,Modules,Potentiometer,IC Socket,Relay,Connector.Our parts cover such applications as commercial,industrial, and automotives areas.

We are looking forward to setting up business relationship with you and hope to provide you with the best service and solution. Let us make a better world for our industry!

Contact us

Tel: +86-755-8981 8866 Fax: +86-755-8427 6832
Email & Skype: info@chipsmall.com Web: www.chipsmall.com
Address: A1208, Overseas Decoration Building, #122 Zhenhua RD., Futian, Shenzhen, China

THIS INFORMATION IS CONFIDENTIAL AND PROPRIETARY TO CW INDUSTRIES INCORPORATED AND ITS AFFILIATES. IT MAY NOT BE DISCLOSED TO ANYONE, OTHER THAN CW INDUSTRIES PERSONNEL, WITHOUT WRITTEN AUTHORIZATION FROM CW INDUSTRIES INCORPORATED, SOUTHAMPTON, PENNSYLVANIA USA.

DIMENSIONS IN INCHES (MILLIMETERS)
DO NOT SCALE DRAWING .....

Dwg. No. GRS-2011-2XXX

PANEL THICKNESS
.025" to .180" (0.64mm to 4.57mm)

PANEL PIERCING

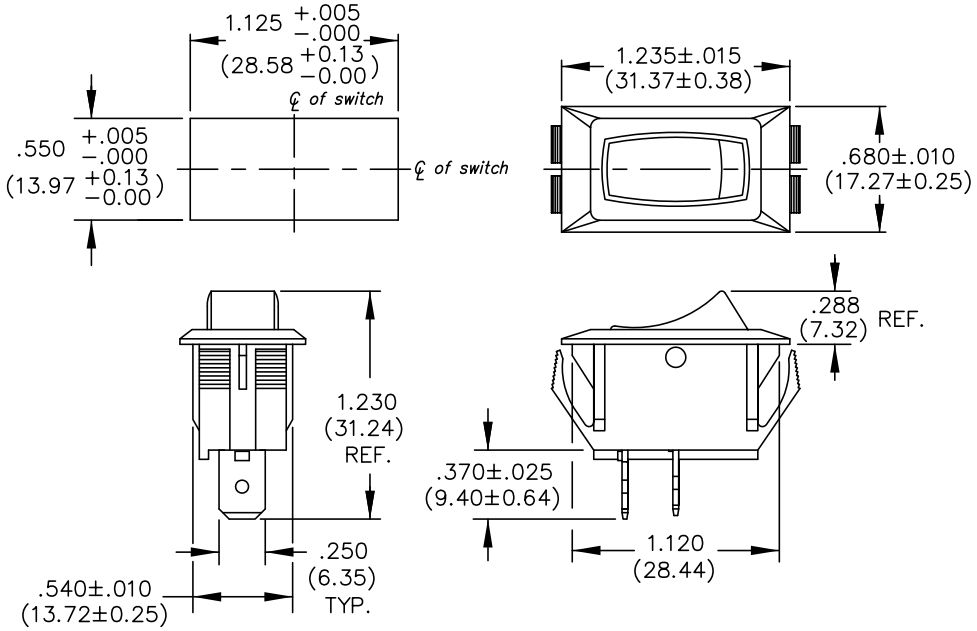

OPTIONS:

POLARIZED PANEL PIERCING

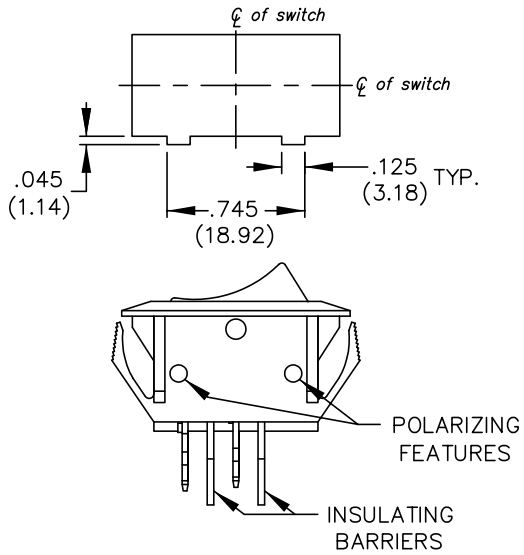

TERMINAL OPTIONS:

.250" Wide Terminal is standard as Shown in drawing.
.187" Wide Terminal is optional.

B-FORMAT 2002

REVISIONS

PDF FILE MADE

CW INDUSTRIES
Southampton, Pa. 18966

TOLERANCES UNLESS OTHERWISE SPECIFIED	
2 Place Decimal ±.010	METRIC
3 Place Decimal ±.005	1 Place Dec. ±.25mm
Angles ..... ±1°	2 Place Dec. ±.13mm

Made for: CW IND.
Drawn by: DGW 6-15-2010
Checked by:
Approval:

Title: ROCKER SWITCH ASSEMBLY S.P.S.T. WITH OPTIONS 1.125 x .550 PANEL

Division: SWITCH

Dwg. No. GRS-2011-2XXX