Chipsmall Limited consists of a professional team with an average of over 10 year of expertise in the distribution of electronic components. Based in Hongkong, we have already established firm and mutual-benefit business relationships with customers from,Europe,America and south Asia,supplying obsolete and hard-to-find components to meet their specific needs.

With the principle of “Quality Parts,Customers Priority,Honest Operation,and Considerate Service”,our business mainly focus on the distribution of electronic components. Line cards we deal with include Microchip,ALPS,ROHM,Xilinx,Pulse,ON,Everlight and Freescale. Main products comprise IC,Modules,Potentiometer,IC Socket,Relay,Connector.Our parts cover such applications as commercial,industrial, and automotives areas.

We are looking forward to setting up business relationship with you and hope to provide you with the best service and solution. Let us make a better world for our industry!

Contact us

Tel: +86-755-8981 8866 Fax: +86-755-8427 6832
Email & Skype: info@chipsmall.com Web: www.chipsmall.com
Address: A1208, Overseas Decoration Building, #122 Zhenhua RD., Futian, Shenzhen, China

Copyright FCI.

FCIconnect.com

PRODUCT NUMBER	PITCH
H6xx00x000J0G	5.00 mm

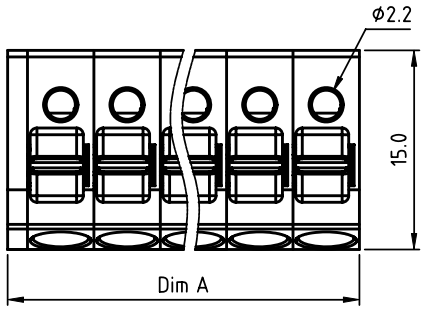

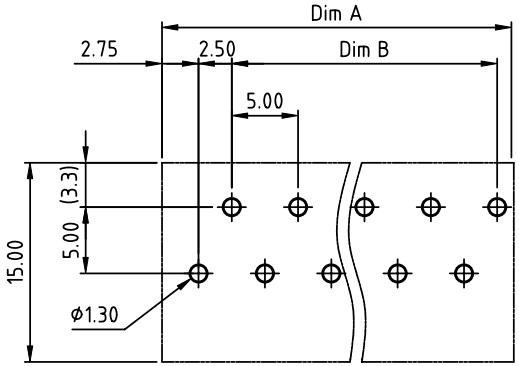

RECOMMENDED P.C.B LAYOUT
TOP VIEW

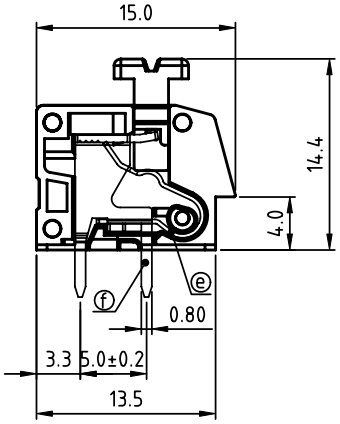

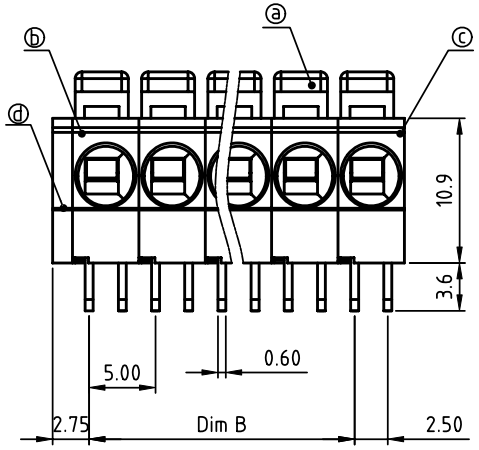

Material:
- Item ⓐLever:Thermoplastic (UL94V-0) White
- Item ⓑTerminal body: Thermoplastic (UL94V-0)
- Item ⓒTerminal side body: Thermoplastic (UL94V-0)
- Item ⓓcover:Thermoplastic (UL94V-0)
- Item ⓔSpring clamp: Stainless steel
- Item ⓕSolder pin: Brass.Tin plated

Electrical:	cULus	VDE
Voltage rating:	300 V	250 V
Current rating:	11 A	12 A
Wire range:		0.5-4mm²
Solid wire(AWG):	12-20	
Stranded wire(AWG):	12-20	
Wire strip length:	10-11 mm	
Withstanding Voltage:	1.6KV	2KV
Operating temperature:	-40°C to +115°C	
Soldering temperature:	260°C ±5°C/5 Sec	
Safety Approval:		

N=Number of poles
Dim A=N×5.0+1.5
Dim B=(N-1)×5.0

Poles	Dim A	Dim B
2-6p	±0.15	±0.15
7-12p	±0.20	±0.20
13-18p	±0.30	±0.25
19-24p	±0.40	±0.30

PART NO.: H6 xx 00 x 0 00J0 G

End stackable
No. of poles
02 2 poles
03 3 poles
... ...
24 24 poles

Color
0 Black (RAL9005)
2 Red (RAL3001/D)
3 Orange(RAL2011/P)
4 Yellow(RAL1018/A)
5 Green(RAL6018/T)
6 Blue (RAL5015/A)
8 Grey(RAL7004/P)
9 White(RAL1102)
C Multiple colors

RoHS compliant
(lead<4%)
In copper Alloy

mat'l. code				surface ASME Y14.5	tolerance ASME Y14.5	projection	product family TERMINAL BLOCK
ltr	ecn no	dr	date	tolerances unless otherwise specified			title
				angles	linear X.±0.5	MM	TERMINAL BLOCK
					X.X±0.3		SPRING CLAMP,180D WIRE INLET,ROUND HOLE
				X°±1°	X.XX±0.1	scale	
				dr	EVIN ZHONG 060614		dwg no H6xx00x000J0G sheet 1 of 1 size A4
				engr	EVIN ZHONG 060614		
				chr	HANKE FENG 060614		
				appd	SHI JUN 060614		type CUSTOMER Drawing
sheet index	revision	A					
	sheet	1					