Chipsmall Limited consists of a professional team with an average of over 10 year of expertise in the distribution of electronic components. Based in Hongkong, we have already established firm and mutual-benefit business relationships with customers from,Europe,America and south Asia,supplying obsolete and hard-to-find components to meet their specific needs.

With the principle of “Quality Parts,Customers Priority,Honest Operation,and Considerate Service”,our business mainly focus on the distribution of electronic components. Line cards we deal with include Microchip,ALPS,ROHM,Xilinx,Pulse,ON,Everlight and Freescale. Main products comprise IC,Modules,Potentiometer,IC Socket,Relay,Connector.Our parts cover such applications as commercial,industrial, and automotives areas.

We are looking forward to setting up business relationship with you and hope to provide you with the best service and solution. Let us make a better world for our industry!

# Contact us

Tel: +86-755-8981 8866 Fax: +86-755-8427 6832
Email & Skype: info@chipsmall.com Web: www.chipsmall.com
Address: A1208, Overseas Decoration Building, #122 Zhenhua RD., Futian, Shenzhen, China

| PART NAME | VALU/ LINE SERIES CABINET | PART No. | HC-14109 | REVISION DATE | 11-1-07 |
|---|---|---|---|---|---|

MATERIAL:
- BACK & COVERS _____ 0.050 THICK ALUMINUM
- SIDES & INNER BRACKETS ___ 0.090 THICK ALUMINUM
- FRONT PANEL _____ 0.125 THICK ALUMINUM
- OUTER BRACKETS _____ 11 GA. C.R.S.
- HANDLE EXTRUSIONS _____ ALUMINUM

FINISH:
- BACK & COVERS _____ PREPAINTED SMOOTH WHITE
- SIDES & OUTER BRACKETS ___ WHITE TEXTURED
- FRONT PANEL _____ NATURAL (OUTSIDE SURFACE TAPED WITH PVC)
- INNER BRACKETS _____ NATURAL
- HANDLE EXTRUSIONS _____ CAUSTIC ETCH & CLEAR ANODIZED
- FEET _____ BLACK

UNIT SHIPPED UNASSEMBLED.

OUTER BRACKETS FOR MOUNTING IN STANDARD 19" WIDE CABINETS.

OPTIONAL SELF-ADHESIVE RUBBER FEET (SUPPLIED)
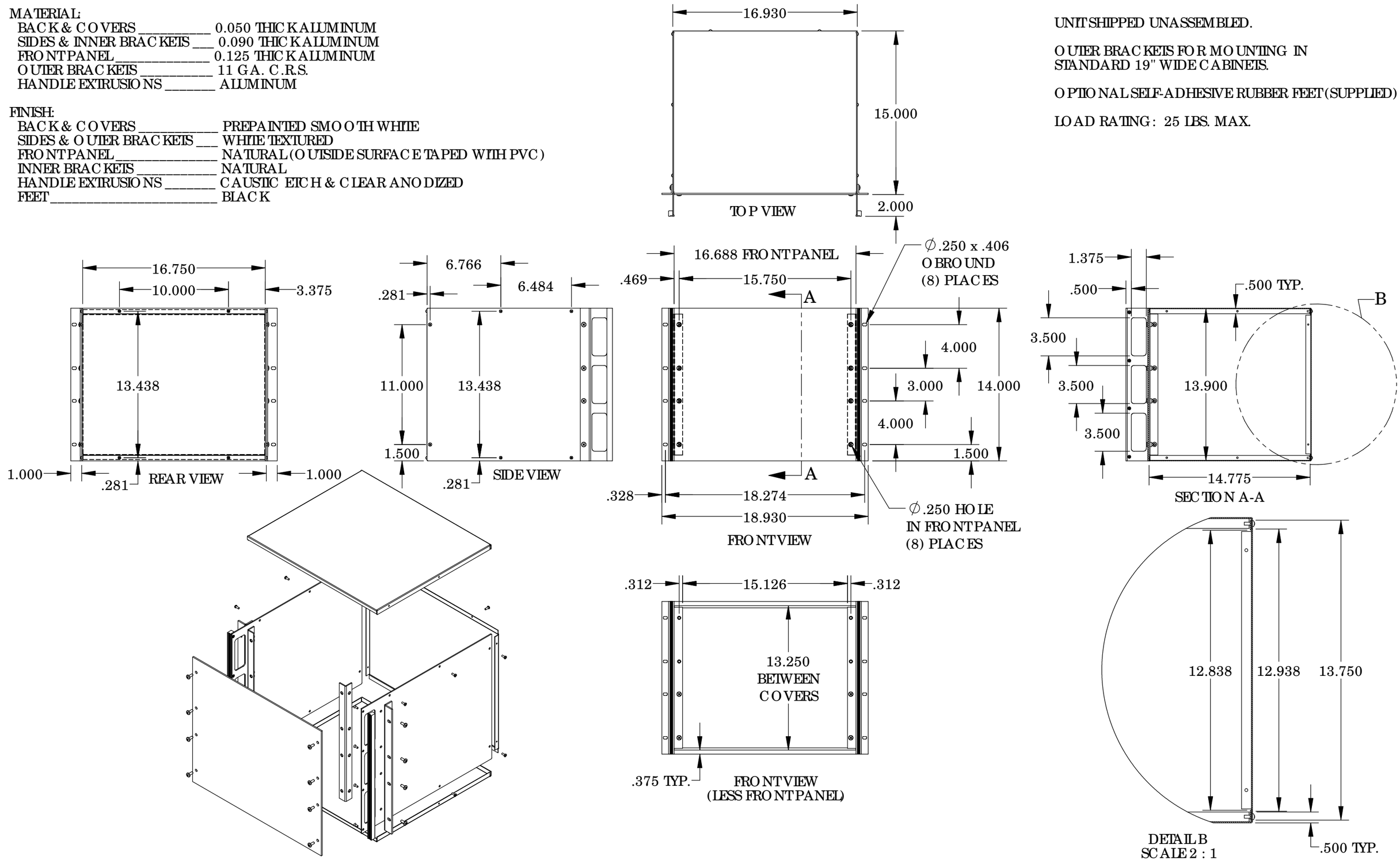
LOAD RATING: 25 LBS. MAX.