Chipsmall Limited consists of a professional team with an average of over 10 year of expertise in the distribution of electronic components. Based in Hongkong, we have already established firm and mutual-benefit business relationships with customers from,Europe,America and south Asia,supplying obsolete and hard-to-find components to meet their specific needs.

With the principle of “Quality Parts,Customers Priority,Honest Operation,and Considerate Service”,our business mainly focus on the distribution of electronic components. Line cards we deal with include Microchip,ALPS,ROHM,Xilinx,Pulse,ON,Everlight and Freescale. Main products comprise IC,Modules,Potentiometer,IC Socket,Relay,Connector.Our parts cover such applications as commercial,industrial, and automotives areas.

We are looking forward to setting up business relationship with you and hope to provide you with the best service and solution. Let us make a better world for our industry!

Contact us

Tel: +86-755-8981 8866 Fax: +86-755-8427 6832
Email & Skype: info@chipsmall.com Web: www.chipsmall.com
Address: A1208, Overseas Decoration Building, #122 Zhenhua RD., Futian, Shenzhen, China

THIS DRAWING IS UNPUBLISHED. RELEASED FOR PUBLICATION 2015
© COPYRIGHT 2015 BY - TE CONNECTIVITY ALL RIGHTS RESERVED.

LOC	DIST
-	-

REVISIONS

P	LTR	DESCRIPTION	DATE	DWN	APVD
	NC	NEW RELEASE PER E.O. A14915	04DEC1995	-	RDR
	A	REVISED PER ECO-15-001798	19MAR2015	VNB	DM

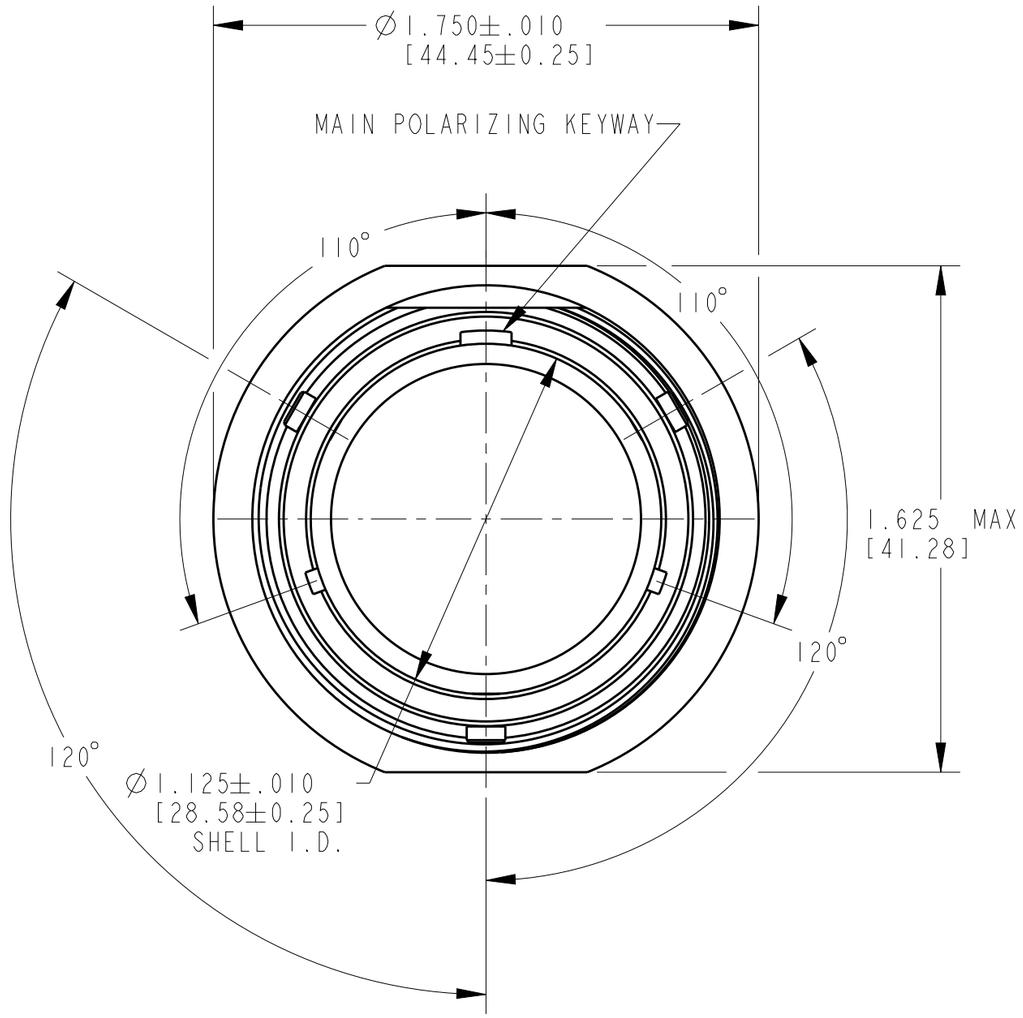

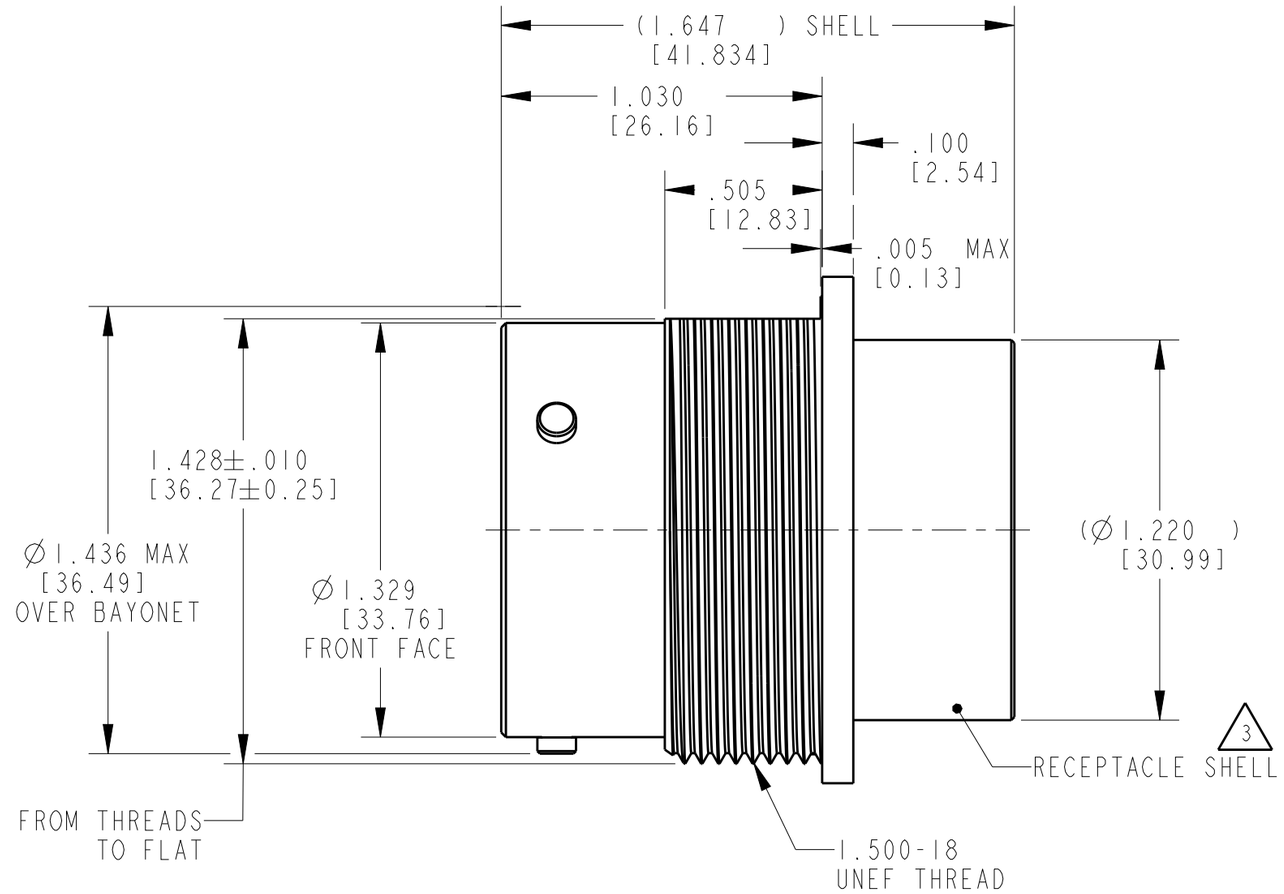

3. MATERIAL:
RECEPTACLE SHELL: AL 6000 SERIES

2. FOR ARRANGEMENT OF CONTACT LOCATION
SEE ENVELOPE DRAWING 0425-013-1800.

1. CONSULT THE FACTORY FOR ELECTRICAL AND MATERIAL
SPECIFICATIONS.

NOTES:

THIS DRAWING IS A CONTROLLED DOCUMENT.

DIMENSIONS: INCHES[mm]

TOLERANCES UNLESS OTHERWISE SPECIFIED:
0 PLC ±-
1 PLC ±-
2 PLC ±-
3 PLC ±.010 [0.254]
4 PLC ±-
ANGLES ±0° 30′0″

MATERIAL SEE NOTE
FINISH -

DWN V. TOMSA 07NOV1995
CHK V. TOMSA 04DEC1995
APVD R. REED 04DEC1995
PRODUCT SPEC 0425-016-0000
APPLICATION SPEC 0425-015-0000
WEIGHT -

TE Connectivity

NAME RECEPTACLE CONNECTOR
SHELL SIZE 18 BAYONET COUPLING
HD30 SERIES

SIZE	CAGE CODE	DRAWING NO	RESTRICTED TO
A3	-	C-HD34-18-XXP/SX	-

Customer Drawing
SCALE 2:1 SHEET 1 OF 1 REV A

1470-19 (3/11)