Chipsmall Limited consists of a professional team with an average of over 10 year of expertise in the distribution of electronic components. Based in Hongkong, we have already established firm and mutual-benefit business relationships with customers from,Europe,America and south Asia,supplying obsolete and hard-to-find components to meet their specific needs.

With the principle of “Quality Parts,Customers Priority,Honest Operation,and Considerate Service”,our business mainly focus on the distribution of electronic components. Line cards we deal with include Microchip,ALPS,ROHM,Xilinx,Pulse,ON,Everlight and Freescale. Main products comprise IC,Modules,Potentiometer,IC Socket,Relay,Connector.Our parts cover such applications as commercial,industrial, and automotives areas.

We are looking forward to setting up business relationship with you and hope to provide you with the best service and solution. Let us make a better world for our industry!

Contact us

Tel: +86-755-8981 8866 Fax: +86-755-8427 6832
Email & Skype: info@chipsmall.com Web: www.chipsmall.com
Address: A1208, Overseas Decoration Building, #122 Zhenhua RD., Futian, Shenzhen, China

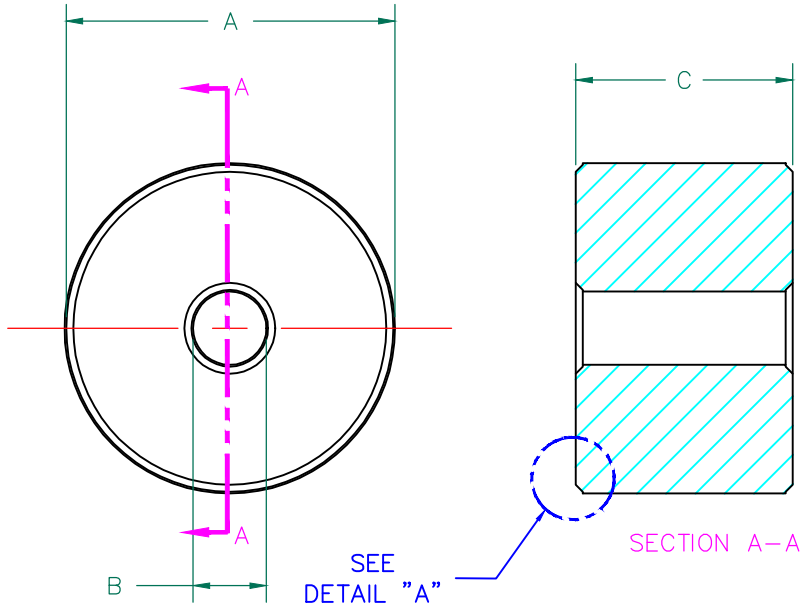

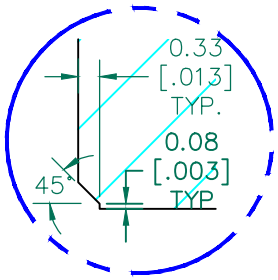

DETAIL "A"
CHAMFER
SCALE=6:1

NET IMPEDANCE (Z)			
Frequency	300 MHz	500 MHz	1 GHz
Nominal (REF)	165 Ω	190 Ω	185 Ω
Minimum	- Ω	152 Ω	- Ω

NET Z,R AND X vs. FREQUENCY
(REF. ONLY)

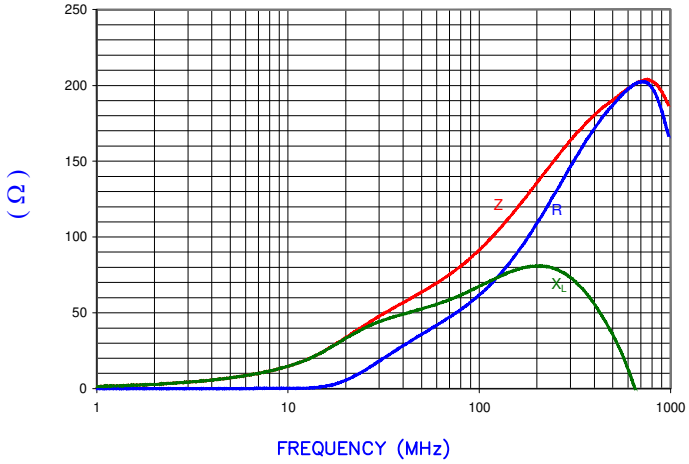

AGILENT E4991A Impedance/Material Analyzer
HP 16092A-Test Fixture

UNCONTROLLED DOCUMENT

FERRITE CORE DIMENSIONS (SPEC) MM [Inches]:

A	15.24 [.600]	±	0.30 [.012]
B	3.38 [.133]	±	0.13 [.005]
C	10.00 [.394]	±	0.20 [.008]

WEIGHT/1000 8.55 kgs [18.84 Lbs]

NOTES: UNLESS OTHERWISE SPECIFIED

1. COSMETIC SPECIFICATION REFER TO WI–QA–038.

SCALE DRAWING 1:1

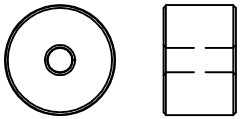

HFB152034–000

RoHS

DIMENSIONS ARE IN mm [INCHES].

REV	DESCRIPTION	DATE	INT
C	UPDATE COMPANY LOGO	01/07/13	QIU
B	UPDATE FORMAT & Z SPECS	03/26/03	JRK
A	ORIGINAL DRAFT	10/17/02	JRK

This print is the property of Laird Tech. and is loaned in confidence subject to return upon request and with the understanding that no copies shall be made without the written consent of Laird Tech. All rights to design or invention are reserved.

Laird

PROJECT/PART NUMBER: HFB152034–000		REV C	DRAWN BY: JRK
DATE: 10/17/02	SCALE: 3:1		MATERIAL: HF
CAD # HFB152034–000–C	TOOL # B0600		