Chipsmall Limited consists of a professional team with an average of over 10 year of expertise in the distribution of electronic components. Based in Hongkong, we have already established firm and mutual-benefit business relationships with customers from,Europe,America and south Asia,supplying obsolete and hard-to-find components to meet their specific needs.

With the principle of “Quality Parts,Customers Priority,Honest Operation,and Considerate Service”,our business mainly focus on the distribution of electronic components. Line cards we deal with include Microchip,ALPS,ROHM,Xilinx,Pulse,ON,Everlight and Freescale. Main products comprise IC,Modules,Potentiometer,IC Socket,Relay,Connector.Our parts cover such applications as commercial,industrial, and automotives areas.

We are looking forward to setting up business relationship with you and hope to provide you with the best service and solution. Let us make a better world for our industry!

Contact us

Tel: +86-755-8981 8866 Fax: +86-755-8427 6832
Email & Skype: info@chipsmall.com Web: www.chipsmall.com
Address: A1208, Overseas Decoration Building, #122 Zhenhua RD., Futian, Shenzhen, China

Ultra High-speed High-precision Laser Displacement Sensor

HL-C2 SERIES

Related Information
■ General terms and conditions..... F-7
■ Glossary of terms / General precautions ..... P.1493 / P.1501
■ Sensor selection guide ..... P.1055~
■ About laser beam..... P.1499~

panasonic.net/id/pidsx/global

CE Conforming to EMC Directive

FDA Conforming to FDA regulations

HL-C2 series are introduced to limited countries only, because some models falls under WA (Wassenaar Arrangement) 2.B.6.b.1.a, and NSG (Nuclear Suppliers Group) guidelines 1.B.3.b.1. Please contact our office for details.

This product is classified as a Class 1 / Class 2 / Class 3R Laser Product in IEC / JIS standards and a Class 1 (Laser Notice No.50*) /Class II / Class IIIa Laser Product in FDA regulations . Never look at or touch the direct laser beam and its reflection.

*This product complies with 21 CFR 1040.10 and 1040.11 Laser Notice No. 50, dated June 24, 2007, issued by CDRH (Center for Devices and Radiological Health) under the FDA (Food and Drug Administration).

Ultra high-speed, high-precision laser displacement sensors using a combination of new technology

Excellent basic performance

These sensors achieve an excellent level of performance in the three basic functions which are required of reflective type laser displacement sensors. They can provide "Surplus", "Reliability" and "Confidence" to production sites which demand high speeds and high precision.

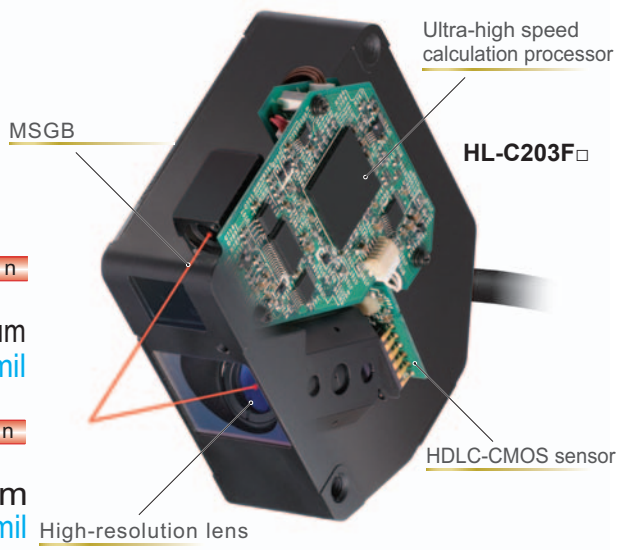

HL-C203F□

Sampling	Linearity	Resolution
100 kHz	±0.03 %	0.025 μm 0.001 mil

HL-C201F□

Sampling	Linearity	Resolution
100 kHz	±0.02 %	0.01 μm 0.0004 mil

HDLC-CMOS sensors

Resolution Sampling

The HDLC-CMOS sensors have been developed specially for the **HL-C2** series. High density light-receiving cells and a processing speed which is close to maximum limits result in high resolutions and high speeds which exceed all expectations for laser displacement sensors.

HDLC: High Density Linear Cell

■Comparison of cell structures (Image)

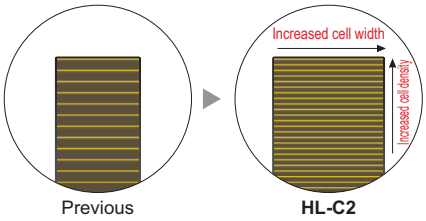

APPLICATIONS

Measurement of the positions of patterned glass

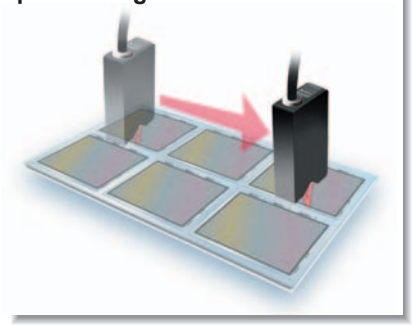

Detection of deformed narrow pitch connector leg pins

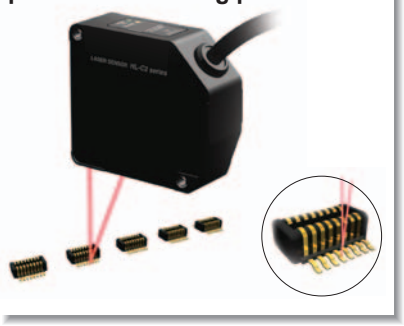

Measurement of HDD surface variations

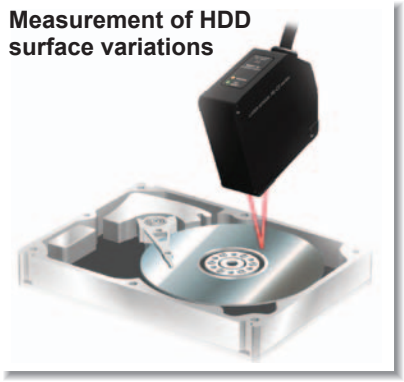

High-resolution lens

Resolution Linearity

High-resolution lens has been newly designed to perfectly suit HDLC-CMOS sensors. The light-receiving part can create images at a minimum point from light received from a variety of different angles to produce images with even greater precision.

■Comparison of beam quality (Image)

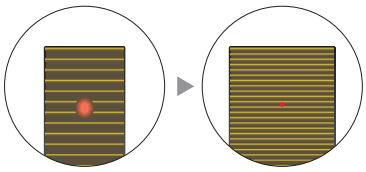

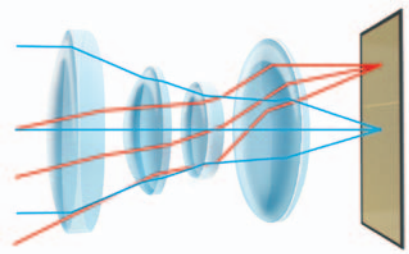

Image

MSGB

Resolution Linearity

Exclusive optical equipment and diaphragm structure sustain laser beam of high quality at a radiant density that is close to ideal in the Gaussian distribution. Emission intensity adjustment function, using the newest algorithm, is able to follow any deviation of the light receiving intensity instantaneously maintaining the best emitting condition at all times.

MSGB: Micro Spot Gaussian Beam

■Comparison of beam diameter

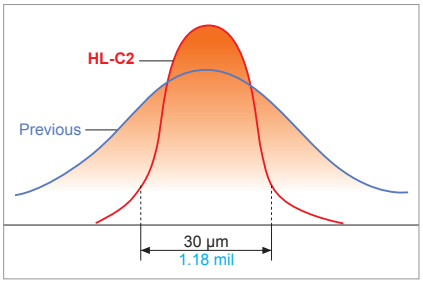

Image

Ultra high-speed calculation processor

Sampling

All signals are digitalized by a high speed processor while achieving high precision and high speed with its exclusive algorithm.

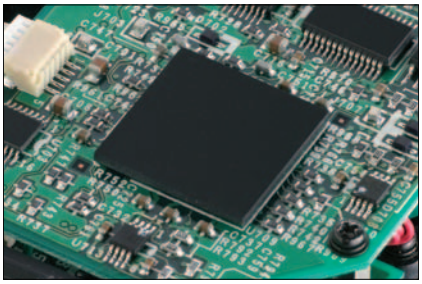

Three types of new sensor head released

NEW

From the close range to the long range, the best three line-ups are available.

Note: For more details of **HL-C205□/C208□/C235□**, please refer to our website.

HL-C205B(-MK)
HL-C205C(-MK)
Mesurement center distance: 50mm

HL-C208B(-MK)
HL-C208C(-MK)
Mesurement center distance: 85mm

HL-C235CE-W(MK)
Mesurement center distance: 350mm

SYSTEM LAYOUT

Controller

Data buffering function

Using this function, about 65,000 pieces of measurement value data can be temporarily stored. All of this stored data can be utilized for comparison or analysis by loading it into computers.

API provided free of charge
(Application Programming Interface)

The API can be used to control the **HL-C2** from a personal computer connected via USB. Sample programs are also available to make program development easier.
Download sample programs from our website.

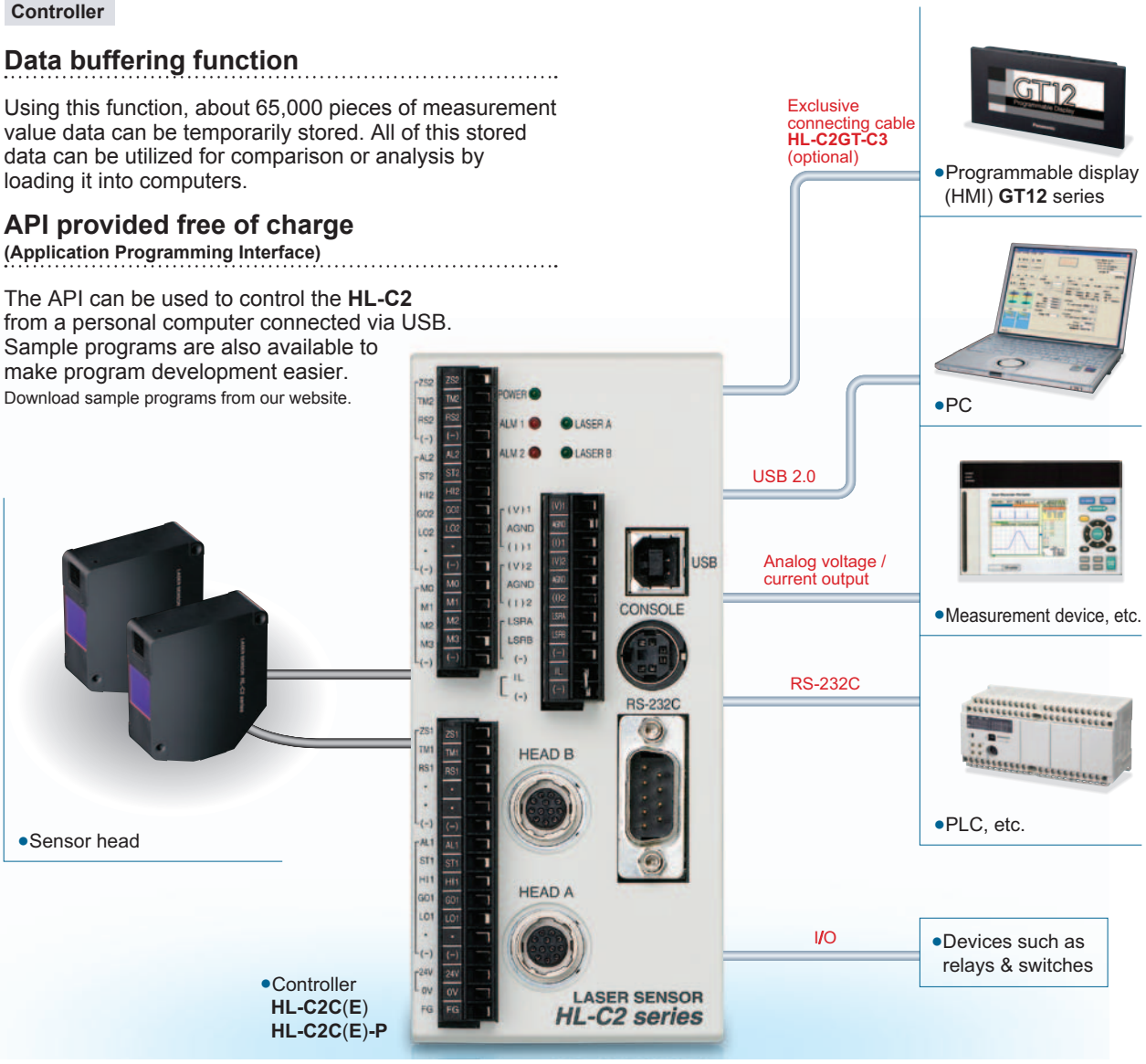

Programmable display (HMI) GT12 series

It is possible to use the programmable display **GT12** as an exclusive console which enables waveform display and condition setting by installing it in the screen data (free of charge) for **HL-C2**. (An exclusive cable is necessary.)
Easy to operate using the touch panel and simple display.

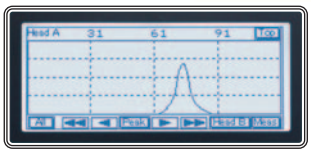

Not only measurement values, but also the wavelength of the amount of light received can be displayed.

Intelligent monitor

Waveform monitoring and function setting by computer at great convenience.

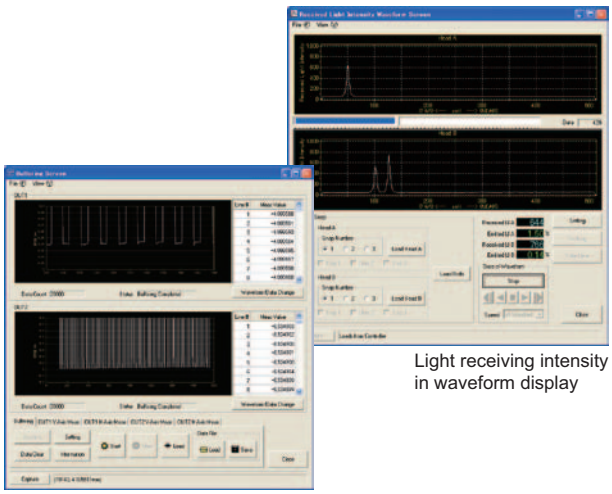

Light receiving intensity in waveform display

Buffering display

Measurement status can be acquired with a programmable controller easily and without any need for programming!

HL-C21C(-P)

The **HL-C21C** supports the MEWTOCOL (used by our **FP** series) and MC protocols (used by Mitsubishi Electric's MELSEC-Q and MELSEC-L series) as well as the iQSS dedicated protocol (used by Mitsubishi Electric's MELSEC-L series), allowing measured values and other information to be written automatically to the data registers of programmable controllers without any need for programming.

*iQSS is an abbreviation for Mitsubishi Electric's iQ Sensor Solution.

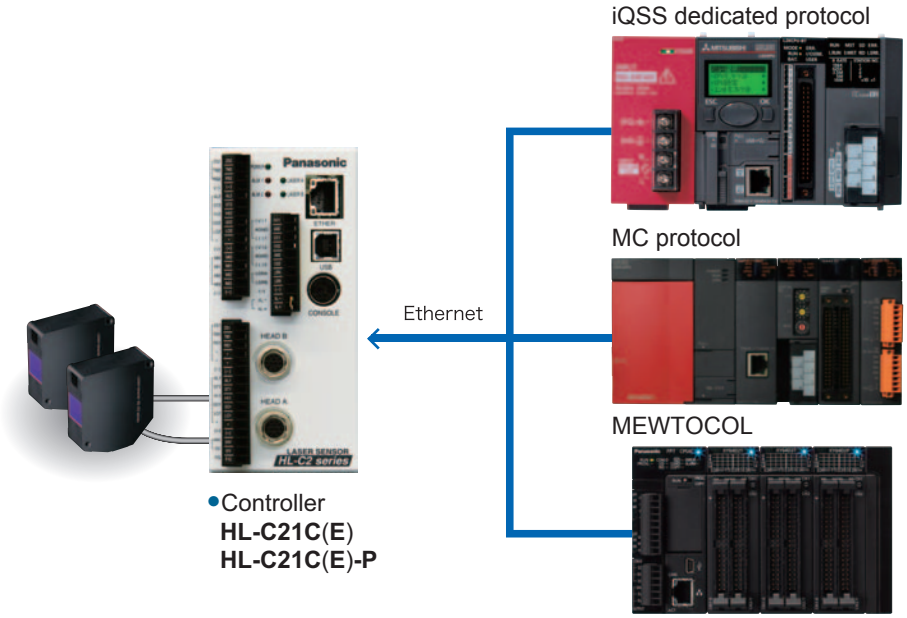

iQSS dedicated protocol

- The iQSS dedicated protocol is supported over Ethernet.
- Connections can be established with MELSEC-L series devices.
- Measured values can be written to data registers.
- Configuration and monitoring are possible with iQSS-compatible GX Works 2.

*Logging and traceability functions.

MC protocol

- The MC protocol is supported over Ethernet.
- Connections can be established with MELSEC-Q and MELSEC-L series devices.
- Measured values can be written to data registers.
- Configuration and monitoring are possible using the MC protocol's ladder control capability.

MEWTOCOL

- MEWTOCOL is supported over Ethernet.
- Connections can be established with **FP7** devices.
- Measured values can be written to data registers.
- Configuration and monitoring are possible using MEWTOCOL's ladder control capability.

FIBER SENSORS
LASER SENSORS
PHOTOELECTRIC SENSORS
MICRO PHOTOELECTRIC SENSORS
AREA SENSORS
LIGHT CURTAINS / SAFETY COMPONENTS
PRESSURE / FLOW SENSORS
INDUCTIVE PROXIMITY SENSORS
PARTICULAR USE SENSORS
SENSOR OPTIONS
SIMPLE WIRE-SAVING UNITS
WIRE-SAVING SYSTEMS
MEASUREMENT SENSORS
STATIC ELECTRICITY PREVENTION DEVICES
LASER MARKERS
PLC
HUMAN MACHINE INTERFACES
ENERGY CONSUMPTION VISUALIZATION COMPONENTS
FA COMPONENTS
MACHINE VISION SYSTEMS
UV CURING SYSTEMS
Selection Guide
Laser Displacement
Magnetic Displacement
Collimated Beam
Digital Panel Controller
Metal-sheet Double-feed Detection
HL-G1
HL-C2
HL-C1

Connection with a MELSEC-L series Mitsubishi Electric unit with IQSS support

The **HL-C21C** supports Mitsubishi Electric's iQ Sensor Solution (iQSS, the general name used for a sensor solution promoted by Mitsubishi Electric).

Configuration of communications connection settings, monitoring of sensors, and reading and writing of sensor parameters can be accomplished easily without programming, allowing development man-hours during deployment to be reduced. Additionally, the system can be up and running faster.

Mitsubishi Electric's GX Works 2 sequencer engineering software (Ver. 1.492N or later) can be used to directly configure and monitor the **HL-C21C**.

(1) The software can search for and check **HL-C21C** connection information.
(2) The software can read and write **HL-C21C** sensor parameters.
(3) The software can monitor data written from the **HL-C21C** to a sequencer.

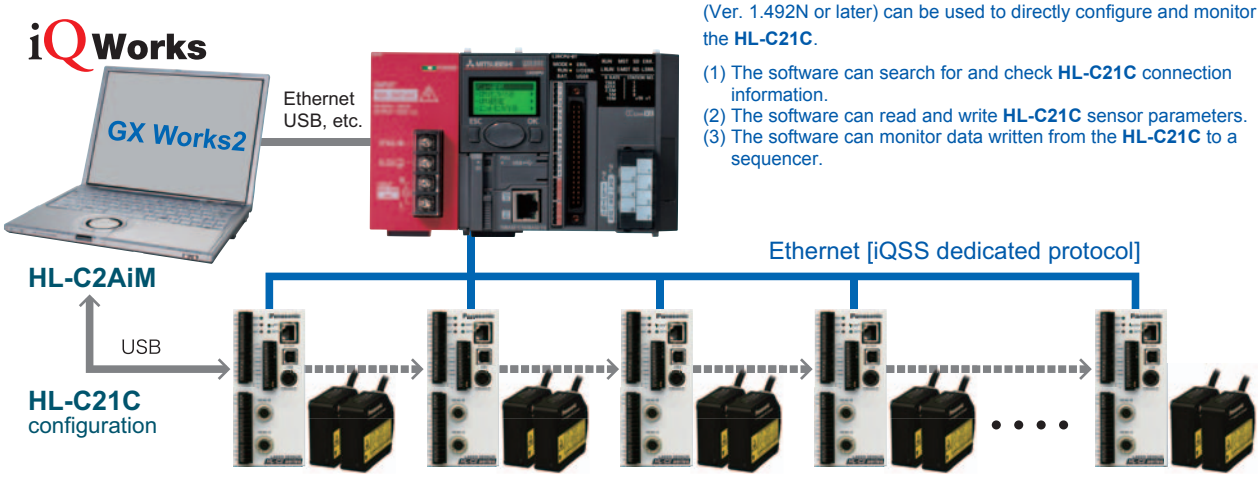

HL-C2AiM: **HL-C2** dedicated intelligent monitor (available for download free of charge on our website)

Easy setup

HL-C21C connection settings can be set up using automatic detection of connected devices and drag-and-drop simplicity.

Reduces development man-hours.

Use Mitsubishi Electric's GX Works 2 sequencer engineering software (Ver. 1.492N or later).

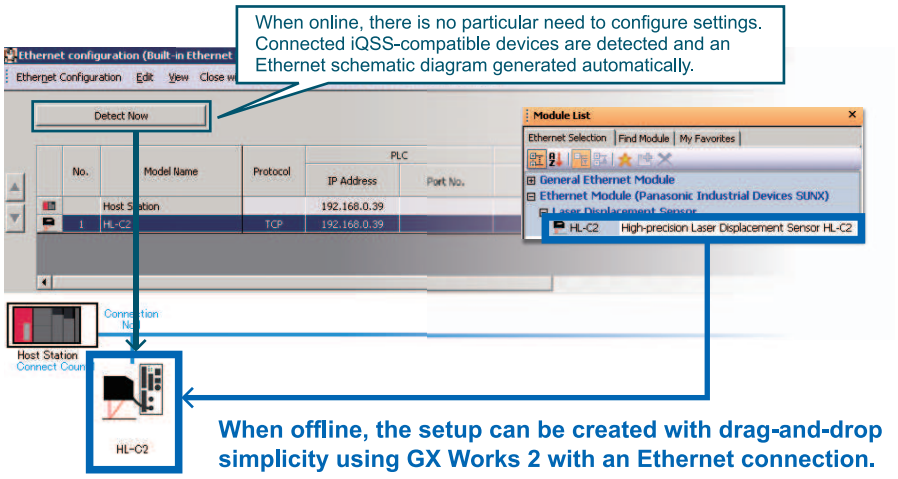

When offline, the setup can be created with drag-and-drop simplicity using GX Works 2 with an Ethernet connection.

Sensor monitoring

The **HL-C21C**'s measurement status can be easily monitored.

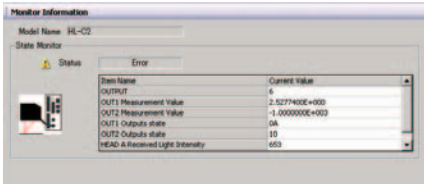

Reading and writing of sensor parameters

HL-C21C sensor parameters can be read and written easily.

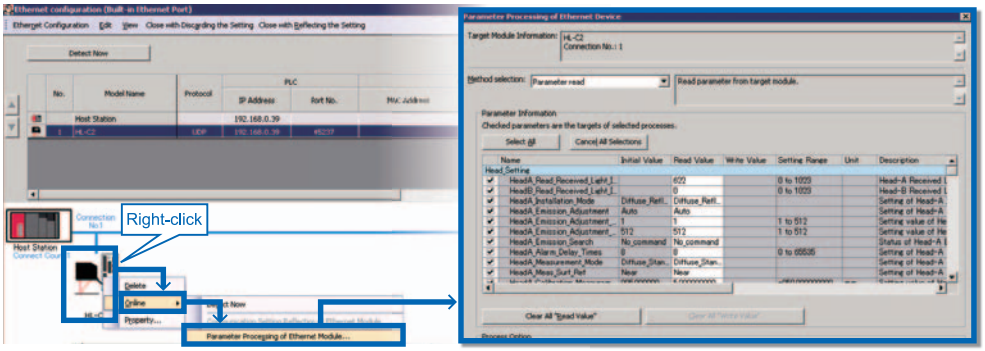

*The **HL-C21C**'s Ethernet communications settings must be configured using **Configurator WD** (Ver. 1.62 or later of our Ethernet communications configuration tool).
(This software is available for download free of charge from our website.)
*The MC protocol is supported for the MELSEC-Q series, and sensors can be monitored.

ORDER GUIDE

Sensor heads

Type	Appearance	Measurement center distance and measuring range	Resolution	Beam size	Model No.	Laser class
Small beam spot type		At diffuse reflection mode 10 ±1 mm 0.394 ±0.039 in	0.01 µm 0.0004 mil	ø20 µm ø0.787 mil approx.	**HL-C201F**	FDA: Class 1 IEC: Class 1
			0.25 µm 0.010 mil		**HL-C201FE**	
Linear beam spot type			0.01 µm 0.0004 mil	20 × 700 µm 0.787 × 27.559 mil approx.	**HL-C201F-MK**	
			0.25 µm 0.010 mil		**HL-C201FE-MK**	
Small beam spot type		At diffuse reflection mode 30 ±5 mm 1.181 ±0.197 in	0.025 µm 0.001 mil	ø30 µm ø1.181 mil approx.	**HL-C203F**	FDA: Class II IEC: Class 2
			0.25 µm 0.010 mil		**HL-C203FE**	
Linear beam spot type			0.025 µm 0.001 mil	30 × 1,200 µm 1.181 × 47.244 mil approx.	**HL-C203F-MK**	
			0.25 µm 0.010 mil		**HL-C203FE-MK**	
Small beam spot type		At diffuse reflection mode 110 ±15 mm 4.331 ±0.591 in	0.1 µm 0.004 mil	ø80 µm ø3.150 mil approx.	**HL-C211F**	FDA: Class II IEC: Class 2
			0.25 µm 0.010 mil		**HL-C211FE**	
			0.1 µm 0.004 mil		**HL-C211F5**	FDA: Class IIIa IEC: Class 3R
			0.25 µm 0.010 mil		**HL-C211F5E**	
Linear beam spot type			0.1 µm 0.004 mil	80 × 1,700 µm 3.150 × 66.929 mil approx.	**HL-C211F-MK**	FDA: Class II IEC: Class 2
			0.25 µm 0.010 mil		**HL-C211FE-MK**	
			0.1 µm 0.004 mil		**HL-C211F5-MK**	FDA: Class IIIa IEC: Class 3R
			0.25 µm 0.010 mil		**HL-C211F5E-MK**	
NEW Small beam spot type		At diffuse reflection mode 50 ± 5 mm 1.969 ± 0.197 in	0.05 µm 0.002 mil	ø70 µm ø2.756 mil approx.	**HL-C205B**	FDA: Class II IEC: Class 2
			0.25 µm 0.010 mil		**HL-C205BE**	
NEW Linear beam spot type			0.05 µm 0.002 mil	70 × 1,000 µm 2.756 × 39.370 mil approx.	**HL-C205B-MK**	
			0.25 µm 0.010 mil		**HL-C205BE-MK**	
NEW Small beam spot type			0.05 µm 0.002 mil	ø70 µm ø2.756 mil approx.	**HL-C205C**	FDA: Class IIIa IEC: Class 3R
			0.25 µm 0.010 mil		**HL-C205CE**	
NEW Linear beam spot type			0.05 µm 0.002 mil	70 × 1,000 µm 2.756 × 39.370 mil approx.	**HL-C205C-MK**	
			0.25 µm 0.010 mil		**HL-C205CE-MK**	
NEW Small beam spot type		At diffuse reflection mode 85 ± 20 mm 3.346 ± 0.787 in	0.15 µm 0.006 mil	ø100 µm ø3.937 mil approx.	**HL-C208B**	FDA: Class II IEC: Class 2
			0.25 µm 0.010 mil		**HL-C208BE**	
NEW Linear beam spot type			0.15 µm 0.006 mil	100 × 1,200 µm 3.937 × 47.244 mil approx.	**HL-C208B-MK**	
			0.25 µm 0.010 mil		**HL-C208BE-MK**	
NEW Small beam spot type			0.15 µm 0.006 mil	ø100 µm ø3.937 mil approx.	**HL-C208C**	FDA: Class IIIa IEC: Class 3R
			0.25 µm 0.010 mil		**HL-C208CE**	
NEW Linear beam spot type			0.15 µm 0.006 mil	100 × 1,200 µm 3.937 × 47.244 mil approx.	**HL-C208C-MK**	
			0.25 µm 0.010 mil		**HL-C208CE-MK**	
NEW Small beam spot type		At diffuse reflection mode 350 ± 200 mm 13.780 ± 7.874 in	2 µm 0.079 mil	ø400 µm ø15.748 mil approx.	**HL-C235CE-W**	FDA: Class IIIa IEC: Class 3R
NEW Linear beam spot type				400 × 6,500 µm 15.748 × 255.906 mil approx.	**HL-C235CE-WMK**	

Note: For more details of **HL-C205□/C208□/C235□**, please refer to our website.

ORDER GUIDE

Controllers

Type			Appearance	Model No.	Applicable sensor head	
RS232C-compatible	High-resolution	NPN output	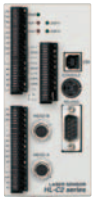	**HL-C2C**	**HL-C201F(-MK)** **HL-C203F(-MK)** **HL-C211F(-MK)** **HL-C211F5(-MK)**	**HL-C205B(-MK)** **HL-C205C(-MK)** **HL-C208B(-MK)** **HL-C208C(-MK)**
		PNP output		**HL-C2C-P**		
	Low-resolution	NPN output		**HL-C2CE**	**HL-C201FE(-MK)** **HL-C203FE(-MK)** **HL-C211FE(-MK)** **HL-C211F5E(-MK)**	**HL-C205BE(-MK)** **HL-C205CE(-MK)** **HL-C208BE(-MK)** **HL-C208CE(-MK)** **HL-C235CE-W(MK)**
		PNP output		**HL-C2CE-P**		
Ethernet-compatible	High-resolution	NPN output		**HL-C21C**	**HL-C201F(-MK)** **HL-C203F(-MK)** **HL-C211F(-MK)** **HL-C211F5(-MK)**	**HL-C205B(-MK)** **HL-C205C(-MK)** **HL-C208B(-MK)** **HL-C208C(-MK)**
		PNP output		**HL-C21C-P**		
	Low-resolution	NPN output		**HL-C21CE**	**HL-C201FE(-MK)** **HL-C203FE(-MK)** **HL-C211FE(-MK)** **HL-C211F5E(-MK)**	**HL-C205BE(-MK)** **HL-C205CE(-MK)** **HL-C208BE(-MK)** **HL-C208CE(-MK)** **HL-C235CE-W(MK)**
		PNP output		**HL-C21CE-P**		

Programmable display

It is possible to use the programmable display as an exclusive console which enables waveform display and condition setting by installing it in the screen data (free of charge) for **HL-C2**.

Designation	Appearance	Model No.	LCD	Power supply	Communication port	Color of front panel	SD memory card slot
GT12M		**AIG12MQ02D**	STN monochrome LCD (white / pink / red backlight)	24 V DC	RS-232C	Pure black	—
		AIG12MQ12D					Available
		AIG12MQ03D				Hairline silver	—
		AIG12MQ13D					Available
GT12G		**AIG12GQ02D**	STN monochrome (green / pink / red backlight)			Pure black	—
		AIG12GQ12D					Available
		AIG12GQ03D				Hairline silver	—
		AIG12GQ13D					Available

Notes: 1) The screen data differs depending on the language. Please download as necessary.
2) To install the screen data in the display, prepare a PC and a USB cable (A ⇔ mini-B connector type) separately.
3) The provided console screen data has no function to write the data into / download the data from SD memory card.
4) Please refer to our website for more details about programmable display **GT12**.

Options

Designation	Appearance	Model No.	Description	
ND filter		**HL-C2F01**	When the amount of reflected light is large at the time that a specular reflection sensor is installed, reducing the amount of laser light to an appropriate level enables a higher precision measurement. (Light detection rate: 98 %)	
Sensor head extension cable		**HL-C2CCJ2**	Length: 2 m 6.562 ft, Weight: 0.2 kg approx.	Cabtyre cable with connector on both ends Cable outer diameter: ø6.6 mm ø0.260 in Connector outer diameter: ø14.7 mm ø0.579 in max.
		HL-C2CCJ5	Length: 5 m 16.404 ft, Weight: 0.4 kg approx.	
		HL-C2CCJ10	Length: 10 m 32.808 ft, Weight: 0.7 kg approx.	
		HL-C2CCJ20	Length: 20 m 65.617 ft, Weight: 1.4 kg approx.	
		HL-C2CCJ30	Length: 30 m 98.425 ft, Weight: 2.0 kg approx.	
GT series connector cable for **HL-C2**		**HL-C2GT-C3**	Length: 3 mm 9.843 ft	Cable to connect the **GT12** and **HL-C2** series controller

SPECIFICATIONS

Sensor heads

Item / Type	Small beam spot type						
Model No.	**HL-C201F(E)**	**HL-C203F(E)**		**HL-C211F(E)**		**HL-C211F5(E)**	
Setup mode	Specular reflection	Diffuse reflection	Specular reflection	Diffuse reflection	Specular reflection	Diffuse reflection	Specular reflection
Measurement center distance	10 mm 0.394 in	30 mm 1.181 in	26.4 mm 1.039 in	110 mm 4.331 in	106.7 mm 4.201 in	110 mm 4.331 in	106.7 mm 4.201 in
Measuring range (Note 3)	±1 mm ±0.039 in	±5 mm ±0.197 in	±4.6 mm ±0.181 in	±15 mm ±0.591 in	±14.5 mm ±0.571 in	±15 mm ±0.591 in	±14.5 mm ±0.571 in
Resolution [Average number of samples] (Note 4)	0.04 µm 0.0016 mil [256] 0.01 µm 0.0004 mil [4,096] (**HL-C201FE**: 0.25 µm 0.010 mil [256])	0.1 µm 0.004 mil [256] 0.025 µm 0.001 mil [4,096] (**HL-C203FE**: 0.25 µm 0.010 mil [256])		0.4 µm 0.016 mil [256] 0.1 µm 0.004 mil [4,096] (**HL-C211FE** and **HL-C211F5E**: 0.25 µm 0.010 mil [256])			
Linearity (Note 5)	±0.02 % F.S.(HL-C201FE: ±0.025% F.S.)	±0.03 % F.S.					
Temperature characteristics	0.01 % F.S./°C (HL-C201FE: 0.013% F.S./℃)						
Light source	Red semiconductor laser (Peak emission wavelength: 658 nm 0.026 mil)						
	Class 1 (IEC / JIS / FDA, Laser Notice No.50), Max. output: 0.1 mW	Class 2 (IEC / JIS), Class II (FDA) Max. output: 1 mW				Class 3R (IEC / JIS), Class IIIa (FDA) Max. output: 5 mW	
Beam size (Note 6)	ø20 µm ø0.787 mil approx.	ø30 µm ø1.181 mil approx.		ø80 µm ø3.150 mil approx.			
Receiving element	Linear image sensor						
Indicator: Laser emission	Green LED (lights up during laser emission)						
Indicator: Measuring range	Yellow LED (lights up when near the measurement center distance, blinks when within the measuring range, and lights out when outside of the measuring range.)						
Environmental resistance: Pollution degree	3 (Industrial environment)						
Environmental resistance: Protection	IP67 (IEC) (excluding the connector)						
Environmental resistance: Ambient temperature	0 to +45 °C +32 to +113 °F (No dew condensation), Storage: –20 to +70 °C –4 to +158 °F						
Environmental resistance: Ambient humidity	35 to 85 % RH, Storage: 35 to 85 % RH						
Environmental resistance: Ambient illuminance	Incandescent light: 3,000 ℓx at the light-receiving face						
Environmental resistance: Vibration resistance	10 to 55 Hz (period: 1 min.) frequency, 1.5 mm 0.059 in amplitude in X,Y and Z directions for two hours each						
Environmental resistance: Shock resistance	196 m/s² acceleration (20 G approx.) in X,Y and Z directions for three times each						
Cable	Cabtyre cable, 0.5 m 1.640 ft long with connector						
Cable extension	Extension up to total 30 m 98.425 ft is possible, with optional cable.						
Material	Enclosure: Die-cast aluminum, Case cover: Die-cast aluminum, Front cover: Glass						
Weight	250 g approx. (including cable)			300 g approx. (including cable)			
Accessory	English warning label: 1 set [The FDA regulations conforming type includes a set of both the IEC label (written in English) and JIS label (written in Japanese)].						

Notes: 1) **HL-C201F**, **HL-C203F**, **HL-C211F**, **HL-C211F5** fall under the Japanese Export Control. These products are introduced to limited countries only. Please refer to "**PRECAUTIONS FOR PROPER USE** (p.1085)".

2) Where measurement conditions have not been specified precisely, the conditions used were as follows: supply voltage 24 V DC, ambient temperature +20 °C +68 °F, sampling rate 40 µs, average number of samples: 256, object measured at measurement center distance is made of white ceramic [an aluminum vapor deposition surface reflection mirror was used **HL-C201F(E)**] and digital measurement values.

3) Measuring range at sampling periods of 20 µs and 10 µs is as follows.

Model No.		**HL-C201F(E)**	**HL-C203F(E)**		**HL-C211F(E), HL-C211F5(E)**	
Setup mode		Specular reflection	Diffuse reflection	Specular reflection	Diffuse reflection	Specular reflection
Sampling	20 µs	+0.1 to +1.0 mm +0.004 to +0.039 in	0 to +5.0 mm 0 to +0.197 in	0 to +4.6 mm 0 to +0.181 in	+0.5 to +15.0 mm +0.020 to +0.591 in	+0.5 to +14.5 mm +0.020 to +0.571 in
	10 µs	+0.8 to +1.0 mm +0.032 to +0.039 in	+3.8 to +5.0 mm +0.150 to +0.197 in	+3.6 to +4.6 mm +0.142 to +0.181 in	+12.5 to +15.0 mm +0.492 to +0.591 in	+12.5 to +14.5 mm +0.492 to +0.571 in

4) The P-P value for the deviation in the digital measurement values at the measurement center range has been converted for the measurement center distance.

5) Indicates error with respect to the ideal linear values for digital displacement output when standard objects were measured by our company. It may vary depending on the types of objects being measured.

6) This beam diameter is the size at the measurement center distance. These values were defined by using 1/e² (13.5 %) of the center light intensity. If there is a slight leakage of light outside the normal spot diameter and if the periphery surrounding the sensing point has a higher reflectivity than the sensing point itself, then the results may be affected.

SPECIFICATIONS

Sensor heads

Item / Model No.	Type	Linear beam spot type						
		HL-C201F(E)-MK	HL-C203F(E)-MK		HL-C211F(E)-MK		HL-C211F5(E)-MK	
Setup mode		Specular reflection	Diffuse reflection	Specular reflection	Diffuse reflection	Specular reflection	Diffuse reflection	Specular reflection
Measurement center distance		10 mm 0.394 in	30 mm 1.181 in	26.4 mm 1.039 in	110 mm 4.331 in	106.7 mm 4.201 in	110 mm 4.331 in	106.7 mm 4.201 in
Measuring range (Note 3)		±1 mm ±0.039 in	±5 mm ±0.197 in	±4.6 mm ±0.181 in	±15 mm ±0.591 in	±14.5 mm ±0.571 in	±15 mm ±0.591 in	±14.5 mm ±0.571 in
Resolution [Average number of samples] (Note 4)		0.04 µm 0.0016 mil [256] 0.01 µm 0.0004 mil [4,096] (**HL-C201FE-MK**: 0.25 µm 0.010 mil [256])	0.1 µm 0.004 mil [256] 0.025 µm 0.001 mil [4,096] (**HL-C203FE-MK**: 0.25 µm 0.010 mil [256])		0.4 µm 0.016 mil [256] 0.1 µm 0.004 mil [4,096] (**HL-C211FE-MK** and **HL-C211F5E-MK**: 0.25 µm 0.010 mil [256])			
Linearity (Note 5)		±0.02 % F.S.(HL-C201FE-MK: ±0.025% F.S.)	±0.03 % F.S.					
Temperature characteristics		0.01 % F.S./˚C (HL-C201FE-MK: 0.013% F.S./℃)						
Light source		Red semiconductor laser (Peak emission wavelength: 658 nm 0.026 mil)						
		Class 1 (IEC / JIS / FDA, Laser Notice No.50), Max. output: 0.1 mW	Class 2 (IEC / JIS), Class II (FDA) Max. output: 1 mW				Class 3R (IEC / JIS), Class IIIa (FDA) Max. output: 5 mW	
Beam size (Note 6)		20 × 700 µm 0.787 × 27.559 mil approx.	30 × 1,200 µm 1.181 × 47.244 mil approx.		80 × 1,700 µm 3.150 × 66.929 mil approx.			
Receiving element		Linear image sensor						
Indicator	Laser emission	Green LED (lights up during laser emission)						
	Measuring range	Yellow LED (lights up when near the measurement center distance, blinks when within the measuring range, and lights out when outside of the measuring range.)						
Environmental resistance	Pollution degree	3 (Industrial environment)						
	Protection	IP67 (IEC) (excluding the connector)						
	Ambient temperature	0 to +45 °C +32 to +113 °F (No dew condensation), Storage: –20 to +70 °C –4 to +158 °F						
	Ambient humidity	35 to 85 % RH, Storage: 35 to 85 % RH						
	Ambient illuminance	Incandescent light: 3,000 ℓx at the light-receiving face						
	Vibration resistance	10 to 55 Hz (period: 1 min.) frequency, 1.5 mm 0.059 in amplitude in X,Y and Z directions for two hours each						
	Shock resistance	196 m/s² acceleration (20 G approx.) in X,Y and Z directions for three times each						
Cable		Cabtyre cable, 0.5 m 1.640 ft long with connector						
Cable extension		Extension up to total 30 m 98.425 ft is possible, with optional cable.						
Material		Enclosure: Die-cast aluminum, Case cover: Die-cast aluminum, Front cover: Glass						
Weight		250 g approx. (including cable)			300 g approx. (including cable)			
Accessory		English warning label: 1 set [The FDA regulations conforming type includes a set of both the IEC label (written in English) and JIS label (written in Japanese)].						

Notes: 1) **HL-C201F-MK**, **HL-C203F-MK**, **HL-C211F-MK**, **HL-C211F5-MK** fall under the Japanese Export Control. These products are introduced to limited countries only. Please refer to "**PRECAUTIONS FOR PROPER USE** (p.1085)".

2) Where measurement conditions have not been specified precisely, the conditions used were as follows: supply voltage 24 V DC, ambient temperature +20 °C +68 °F, sampling rate 40 µs, average number of samples: 256, object measured at measurement center distance is made of white ceramic [an aluminum vapor deposition surface reflection mirror was used **HL-C201F(E)-MK**] and digital measurement values.

3) Measuring range at sampling periods of 20 µs and 10 µs is as follows.

Model No.		HL-C201F(E)-MK	HL-C203F(E)-MK		HL-C211F(E)-MK, HL-C211F5(E)-MK	
Setup mode		Specular reflection	Diffuse reflection	Specular reflection	Diffuse reflection	Specular reflection
Sampling	20 µs	+0.1 to +1.0 mm +0.004 to +0.039 in	0 to +5.0 mm 0 to +0.197 in	0 to +4.6 mm 0 to +0.181 in	+0.5 to +15.0 mm +0.020 to +0.591 in	+0.5 to +14.5 mm +0.020 to +0.571 in
	10 µs	+0.8 to +1.0 mm +0.032 to +0.039 in	+3.8 to +5.0 mm +0.150 to +0.197 in	+3.6 to +4.6 mm +0.142 to +0.181 in	+12.5 to +15.0 mm +0.492 to +0.591 in	+12.5 to +14.5 mm +0.492 to +0.571 in

4) The P-P value for the deviation in the digital measurement values at the measurement center range has been converted for the measurement center distance.

5) Indicates error with respect to the ideal linear values for digital displacement output when standard objects were measured by our company. It may vary depending on the types of objects being measured.

6) This beam diameter is the size at the measurement center distance. These values were defined by using $1/e^2$ (13.5 %) of the center light intensity. If there is a slight leakage of light outside the normal spot diameter and if the periphery surrounding the sensing point has a higher reflectivity than the sensing point itself, then the results may be affected.

SPECIFICATIONS

Controllers

Item	Type	RS-232C-compatible	Ethernet-compatible
Model No.	NPN output type	**HL-C2C(E)**	**HL-C21C(E)**
	PNP output type	**HL-C2C(E)-P**	**HL-C21C(E)-P**
Connectable sensor head		Number of connectable units: Max. 2 units.	
Supply voltage		24 V DC ±10 % including ripple 0.5 V (P-P)	
Current consumption		500 mA approx. at 2 sensor heads connected 350 mA approx. at 1 sensor head connected	
Sampling cycle		10 µs, 20 µs, 40 µs, 100 µs, 200 µs, 400 µs, 1 ms, 2 ms	
Analog output	Voltage (Note 2)	Voltage output scale: –5 to +5 V/F.S (initial value) Output range during normal status: –10.0 to +10.0 V Output at abnormal status: –10.8 V or +10.8 V Resolution: 2 mV, Linearity: ±0.05 % F.S. Max. 2 mA, output impedance 50 Ω, Response delay time: 1.5 µs/V approx.	
	Current (Note 3)	Current output scale: 4 to 20 mA/F.S (initial value) Output range during normal status: 2 to 24 mA Output at abnormal status: 1 mA or 25 mA Resolution: 3 µA, Linearity ±0.05% F.S. Load impedance: 250 Ωmax., Response delay time: 10 µs approx.	
Alarm output		<NPN output type> NPN open-collector transistor • Maximum sink current: 100 mA • Applied voltage: 30 V DC or less [between alarm output and Common(–)] • Residual voltage: 1 V or less (at 100 mA sink current)	<PNP output type> PNP open-collector transistor • Maximum source current: 100 mA • Applied voltage: 30 V DC or less (between alarm output and +V) • Residual voltage: 1 V or less (at 100 mA source current)
	Output operation	Opened when the amount of light is insufficient	
	Short-circuit protection	Incorporated	
Judgment output (HI, GO, LO)		<NPN output type> NPN open-collector transistor • Maximum sink current: 100 mA • Applied voltage: 30 V DC or less [between judgment output to Common(–)] • Residual voltage: 1 V or less (at 100 mA sink current)	<PNP output type> PNP open-collector transistor • Maximum source current: 100 mA • Applied voltage: 30 V DC or less (between judgment output to +V) • Residual voltage: 1 V or less (at 100 mA source current)
	Output operation	Opened at output operation	
	Short-circuit protection	Incorporated	
Strobe output		<NPN output type> NPN open-collector transistor • Maximum sink current: 100 mA • Applied voltage: 30 V DC or less [between strobe output to Common(–)] • Residual voltage: 1 V or less (at 100 mA sink current)	<PNP output type> PNP open-collector transistor • Maximum source current: 100 mA • Applied voltage: 30 V DC or less (between strobe output to +V) • Residual voltage: 1 V or less (at 100 mA source current)
	Output operation	Opened at data determination	
	Short-circuit protection	Incorporated	
Remote interlock input		<NPN output type> Laser emission is delayed when connected to Common (–). Laser emission stop at open Applied voltage: 30 V DC or less (Leak current: 0.1 mA or less)	<PNP output type> Laser emission is delayed when connected to IL (+). Laser emission stop at open Applied voltage: 30 V DC or less (Leak current: 0.1 mA or less)
Laser control input		<NPN output type> Laser emission is stopped when connected to Common (–). Laser is emitted immediately after opened. Applied voltage: 30 V DC or less (Leak current: 0.1 mA or less)	<PNP output type> Laser emission is stopped when connected to external power (+). Laser is emitted immediately after opened. Applied voltage: 30 V DC or less (Leak current: 0.1 mA or less)
Zero set input		<NPN output type> Zero set is ON when connected with Common (–). Zero set turns to OFF after continuously connected to Common (–) for one second. Applied voltage: 30 V DC or less (Leak current: 0.1 mA or less)	<PNP output type> Zero set is ON when connected with external power (+). Zero set turns to OFF after continuously connected to external power (+) for one second. Applied voltage: 30 V DC or less (Leak current: 0.1 mA or less)
Timing input		<NPN output type> ON at/during connection to Common (–) (depending on analysis mode) Applied voltage: 30 V DC or less (Leak current: 0.1 mA or less)	<PNP output type> ON at/during connection to external power (+) (depending on analysis mode) Applied voltage: 30 V DC or less (Leak current: 0.1 mA or less)
Reset input		<NPN output type> Reset is done when connected to Common (–). Applied voltage: 30 V DC or less (Leak current: 0.1 mA or less)	<PNP output type> Reset is done when connected to external power (+). Applied voltage: 30 V DC or less (Leak current: 0.1 mA or less)
Memory change input		<NPN output type> Memory is specified when connected to Common (–). Applied voltage: 30 V DC or less (Leak current: 0.1 mA or less)	<PNP output type> Memory is specified when connected to external power (+). Applied voltage: 30 V DC or less (Leak current: 0.1 mA or less)

SPECIFICATIONS

Controllers

Item		Type	RS-232C-compatible	Ethernet-compatible
		Model No. NPN output type	**HL-C2C(E)**	**HL-C21C(E)**
		Model No. PNP output type	**HL-C2C(E)-P**	**HL-C21C(E)-P**
Indicator	Power		Green LED (lights up at power on)	
Indicator	Sensor head A Laser radiation		Green LED (lights up during or immediately before laser emission of sensor head A)	
Indicator	Sensor head B Laser radiation		Green LED (lights up during or immediately before laser emission of sensor head B)	
Indicator	Alarm 1		Red LED (lights up when OUT1 can not be measured due to insufficient amount of light)	
Indicator	Alarm 2		Red LED (lights up when OUT2 can not be measured due to insufficient amount of light)	
RS-232C interface			Baud rate: 9,600, 19,200, 38,400, 115,200 bit/s	——
Ethernet interface (Note 4)			——	IEEE802.3u, 10 Base-T / 100 Base-TX RJ45 iQSS dedicated protocol, MC protocol, MEWTOCOL
USB interface			USB 2.0 Full-speed (USB 1.1 compatible) compliant	
Setting / data display			Programmable display (HMI) **GT12** series	
Environmental resistance	Ambient temperature		0 to +50 °C +32 to +122 °F (No dew condensation or icing allowed), Storage: –20 to +70 °C –4 to +158 °F	
Environmental resistance	Ambient humidity		35 to 85 %RH	
Environmental resistance	Vibration resistance		10 to 55 Hz frequency (period: 1 min.), 0.75 mm 0.030 in amplitude in X, Y and Z directions for 30 min. each	
Environmental resistance	Shock resistance		196 m/s² acceleration (20G approx.) in X, Y, and Z directions for three times each	
Material			Enclosure: Polycarbonate	
Weight			450 g approx.	
Accessories			CD-ROM: 1 pc., USB cable (2 m 6.562 ft long): 1 pc., Short bracket: 1 pc.	CD-ROM: 1 pc., USB cable (2 m 6.562 ft long): 1 pc. Short bracket: 1 pc. Ferrite cores (E04SR200935A, by Seiwa Electric Mfg. Co., Ltd.): 3 pcs.

Notes: 1) These products fall under the Japanese Export Control settled by Foreign Exchange and Foreign Trade Act. The products that do not fall under the control are also available. Please contact us for more details.
2) The linearity is F.S.=20 V to digital measurement value. Response delay time is the period after update of measurement value.
3) The linearity is F.S.=16 mA to digital measurement value. Response delay time is the period after update of measurement value.
4) The **HL-C21C**'s Ethernet communications settings must be configured using **Configurator WD** (Ver.1.62 or later of our Ethernet communications configuration tool). Please download this software from our website.

I/O CIRCUIT AND WIRING DIAGRAMS (CONTROLLERS)

NPN output type

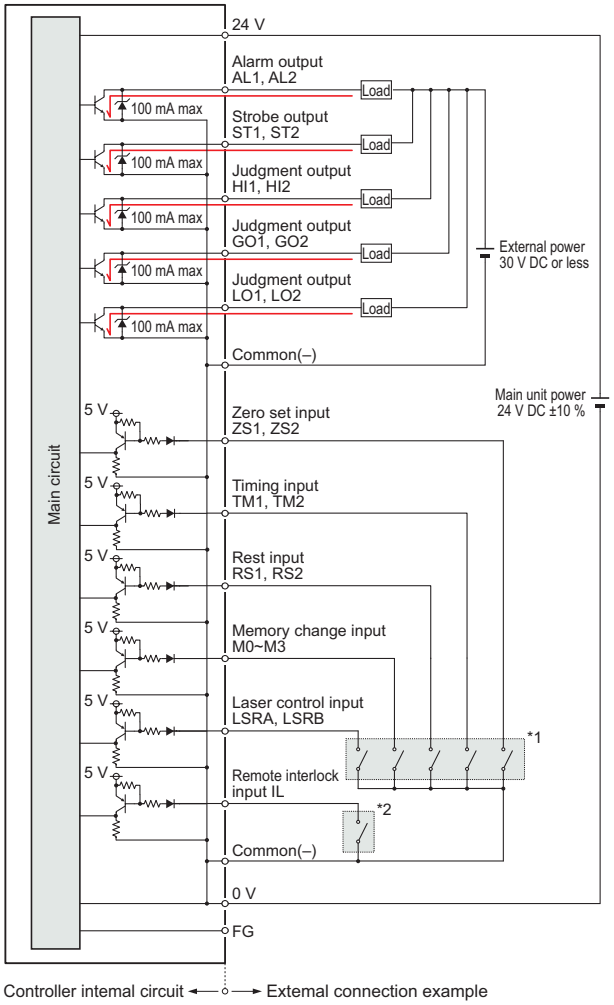

PNP output type

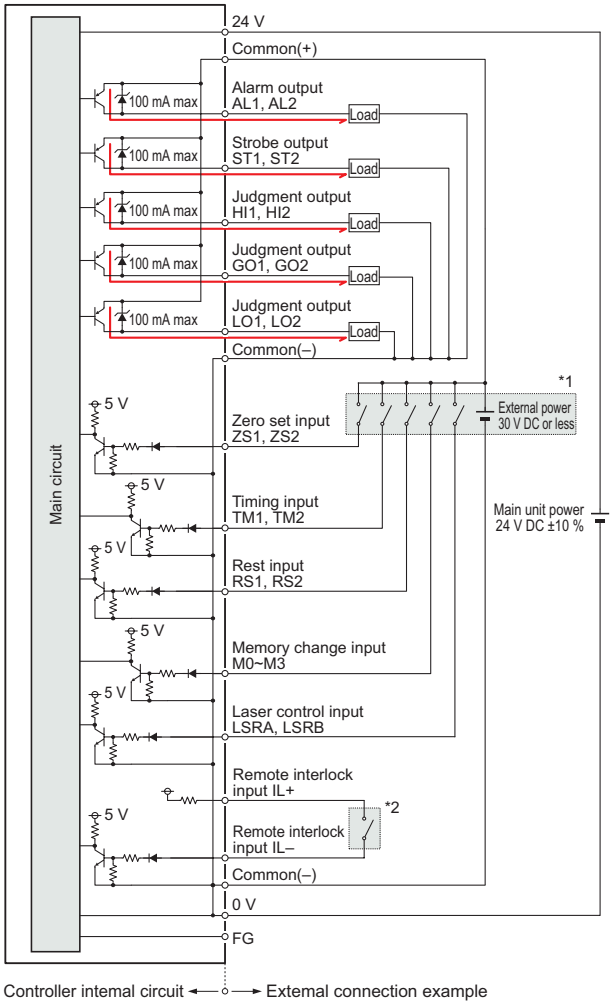

Analog output (Common in NPN output type and PNP output type)

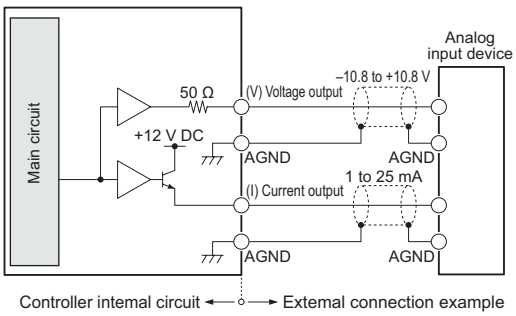

Notes: 1) Do not short-circuit analog output terminals or apply voltage to them.
2) Use shielded wires for analog outputs.

I/O CIRCUIT AND WIRING DIAGRAMS (CONTROLLERS)

Terminal arrangement

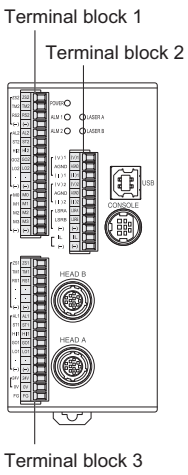

Terminal block 1

Terminal NPN	Terminal PNP	Function
(V)1		Analog voltage output (for OUT1)
AGND		Analog ground
(I)1		Analog current output (for OUT1)
(V)2		Analog voltage output (for OUT2)
AGND		Analog ground
(I)2		Analog current output (for OUT2)
LSRA		Laser control input (for Head A) Laser stop during short circuit
LSRB		Laser control input (for Head B) Laser stop during short circuit
(–)		Common (–)
IL	IL-	Remote interlock Laser stop when opened.
(–)	IL+	Remote interlock common

Terminal block 2

Terminal NPN	Terminal PNP	Function
ZS2		Zero set input (for OUT2) ON during short circuit (Note 1)
TM2		Timing input (for OUT2) ON during short circuit
RS2		Reset input (for OUT2) ON during short circuit
(–)		Common (–)
AL2		Alarm output (for OUT2)
ST2		Strobe output (for OUT2)
HI2		Judgment HI output (for OUT2)
GO2		Judgment GO output (for OUT2)
LO2		Judgment LO output (for OUT2)
•		Reserved terminal (Note 2)
(–)	(+)	Common (–) / Common (+)
M0		Memory change (16 ways)
M1		
M2		
M3		
(–)		Common (–)

Notes: 1) Turn off the terminal in case short circuit lasts for more than one second.
2) Do not connect anything to the reserved terminals; they are connected to the internal circuit.

Terminal block 3

Terminal NPN	Terminal PNP	Function
ZS1		Zero set input (for OUT1) ON during short circuit (Note 1)
TM1		Timing input (for OUT1) ON during short circuit
RS1		Reset input (for OUT1) ON during short circuit
•		Reserved terminal
•		Reserved terminal
(–)		Common (–)
AL1		Alarm output (for OUT1)
ST1		Strobe output (for OUT1)
HI1		Judgment HI output (for OUT1)
GO1		Judgment GO output (for OUT1)
LO1		Judgment LO output (for OUT1)
•		Reserved terminal (Note 2)
(–)	(+)	Common (–) / Common (+)
24V		24 V DC input for power supply
0V		Power supply ground 0 V
FG		Frame ground

Notes: 1) Turn off the terminal in case short circuit lasts for more than one second.
2) Do not connect anything to the reserved terminals; they are connected to the internal circuit.

SENSING CHARACTERISTICS (TYPICAL)

HL-C201F(E)

Correlation between measuring distance and error characteristics

Setup mode: Specular reflection

Aluminum vapor deposition surface reflection mirror (0°, ±0.5°)
Vertical orientation

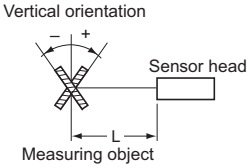

Aluminum vapor deposition surface reflection mirror (0°, ±0.2°)
Horizontal orientation

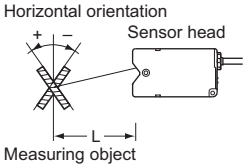

• Vertical positioning

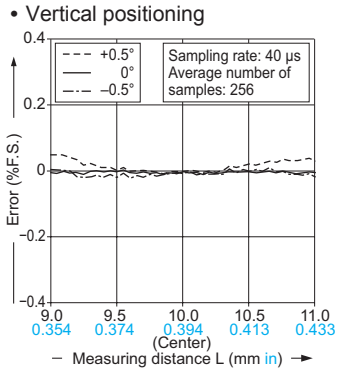

• Horizontal positioning

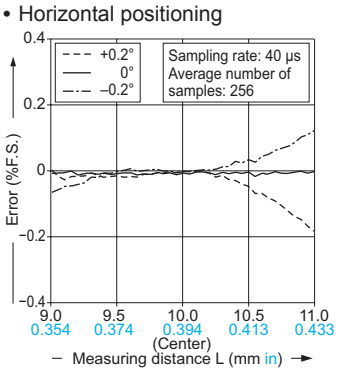

SENSING CHARACTERISTICS (TYPICAL)

HL-C203F(E)

Correlation between measuring distance and error characteristics

Setup mode: Diffuse reflection

White ceramic (0°, ±10°)
Vertical orientation

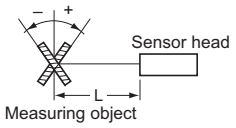

White ceramic (0°, ±10°)
Horizontal orientation

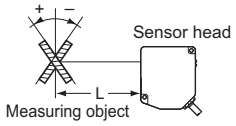

• Vertical positioning

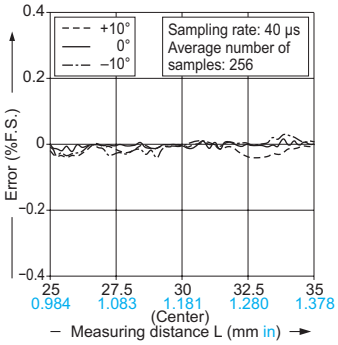

• Horizontal positioning

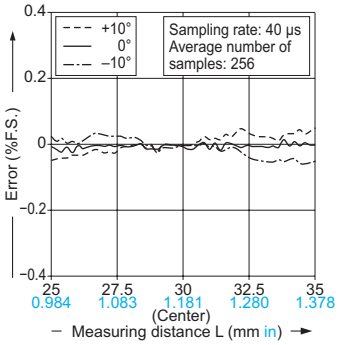

Setup mode: Specular reflection

Aluminum vapor deposition surface reflection mirror (0°, ±0.5°)
Vertical orientation

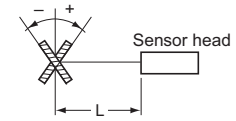

Aluminum vapor deposition surface reflection mirror (0°, ±0.2°)
Horizontal orientation

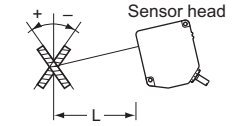

• Vertical positioning

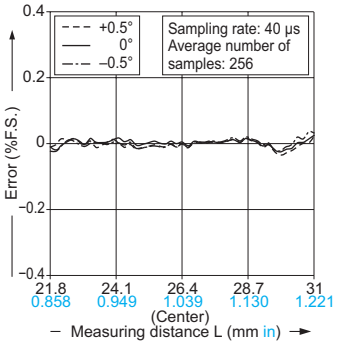

• Horizontal positioning

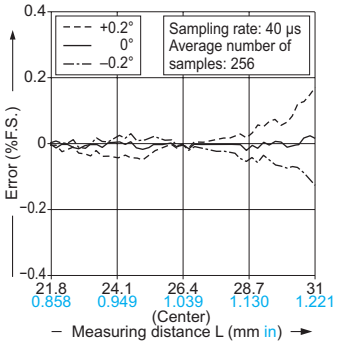

HL-C211F(E) HL-C211F5(E)

Correlation between measuring distance and error characteristics

Setup mode: Diffuse reflection

White ceramic (0°, ±10°)
Vertical orientation

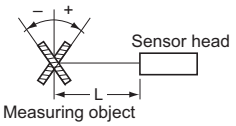

White ceramic (0°, ±10°)
Horizontal orientation

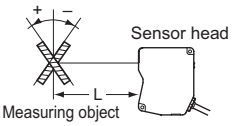

• Vertical positioning

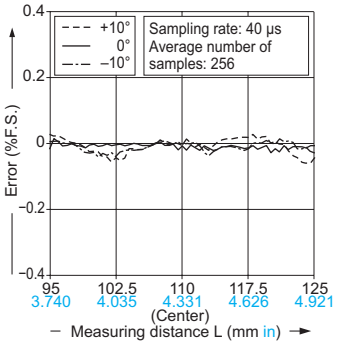

• Horizontal positioning

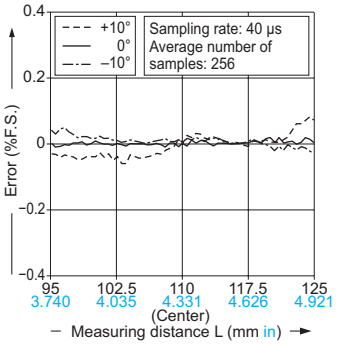

Setup mode: Specular reflection

Aluminum vapor deposition surface reflection mirror (0°, ±0.1°)
Vertical orientation

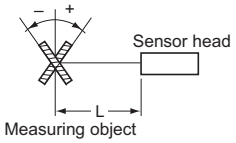

Aluminum vapor deposition surface reflection mirror (0°, ±0.05°)
Horizontal orientation

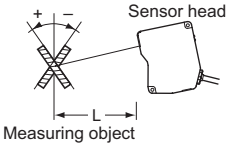

• Vertical positioning

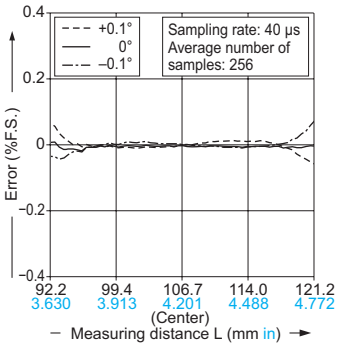

• Horizontal positioning

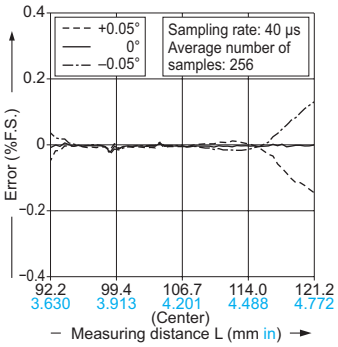

PRECAUTIONS FOR PROPER USE

Refer to p.1501 for general precautions and p.1499~ for information about laser beam.

• This catalog is a guide to select a suitable product. Be sure to read instruction manual attached to the product prior to its use.

• Never use this product as a sensing device for personnel protection.
• In case of using sensing devices for personnel protection, use products which meet laws and standards, such as OSHA, ANSI or IEC etc., for personnel protection applicable in each region or country.

PRECAUTIONS FOR PROPER USE

Refer to p.1501 for general precautions and p.1499~ for information about laser beam.

- Do not operate products using methods other than those described in the instruction manual included with each product. Control or adjustment through procedures other than those specified may cause hazardous laser radiation exposure.
- The following labels are attached to the products. Handle each product according to the instruction given on the warning label.

HL-C201F□

- This product is classified as a Class 1 Laser Product in IEC / JIS standards and FDA* regulations 21 CFR 1040.10. Do not look at the laser beam through optical devices such as a lens.

HL-C203F□, HL-C211F□

- This product is classified as a Class 2 Laser Product in IEC / JIS standards and a Class II Laser Product in FDA regulations 21 CFR 1040.10. Do not look at the laser beam directly or through optical devices such as a lens.

HL-C211F5□

- This product is classified as a Class 3R Laser Product in IEC / JIS standards and a Class IIIa Laser Product in FDA regulations 21 CFR 1040.10. Never directly look at or touch the laser beam or its reflection.

*This product complies with 21 CFR 1040.10 and 1040.11 Laser Notice No. 50, dated June 24, 2007, issued by CDRH (Center for Devices and Radiological Health) under the FDA (Food and Drug Administration).

- Below mentioned products fall under Japanese Export Control, which is defined by "Foreign Exchange and Foreign Trade Act".
  Therefore, anyone who wishes to export or transfer these products outside of Japan is required to obtain the necessary license from the Ministry of Economy, Trade and Industry of Japan.
  Also, these products fall under international export control regulations, such as Nuclear Suppliers Group (NSG) guidelines 1.B.3.b.1 and Wassenaar Arrangement (WA) 2.B.6.b.1.a, and are objects of the regulation. Please comply with the export control in each country.

Note: These products are introduced to limited countries only. Please contact our office for details.

Beam size (Unit: mm in)

HL-C201F(E)
Small beam spot type

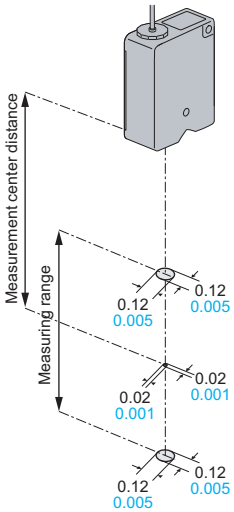

HL-C201F(E)-MK
Linear beam spot type

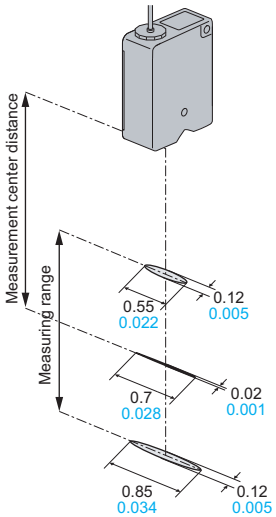

HL-C203F(E)
Small beam spot type

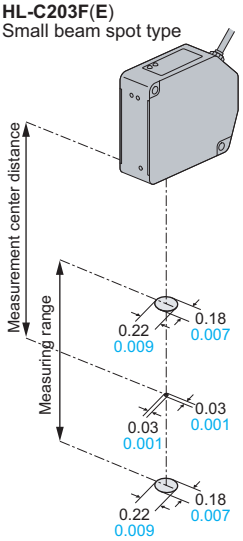

HL-C203F(E)-MK
Linear beam spot type

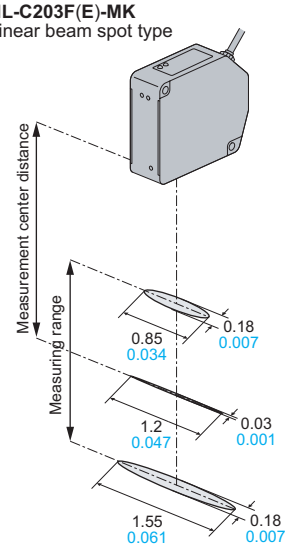

HL-C211F(E)
Small beam spot type

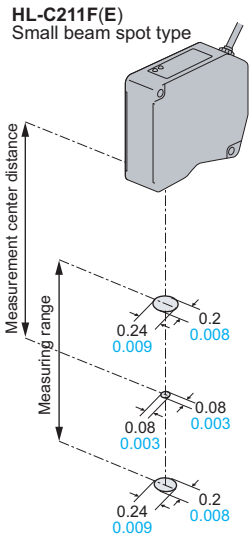

HL-C211F(E)-MK
Linear beam spot type

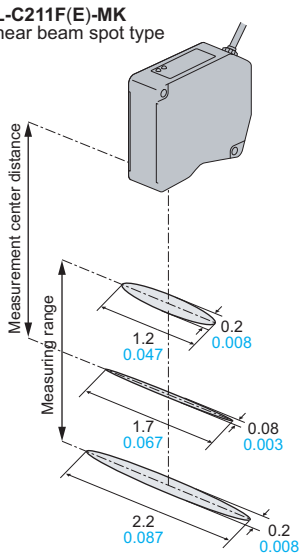

PRECAUTIONS FOR PROPER USE

Refer to p.1501 for general precautions and p.1499~ for information about laser beam.

Mutual interference

- When installing two or more sensor heads side by side, mutual interference will not occur if the laser spots from other sensor heads do not fall within the shaded areas of the sensor head in the figure below.
- When connecting two sensor heads to one controller, the mutual interference prevention function can be used. Therefore the measures shown below are not necessary.

HL-C203F□

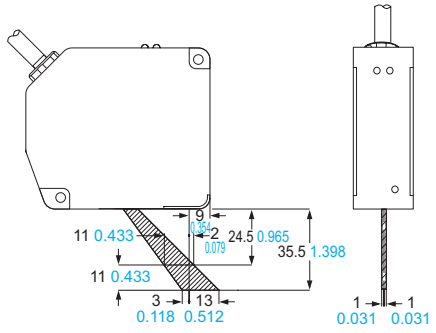

(Unit: mm in)

HL-C211F□

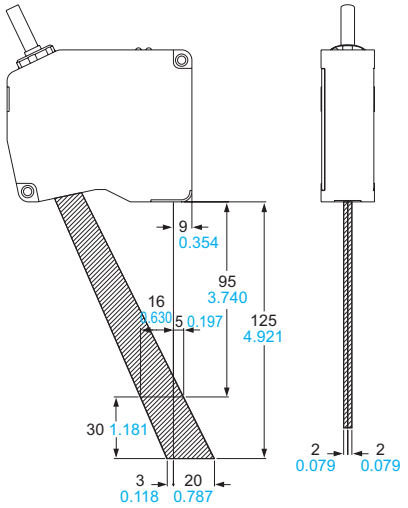

(Unit: mm in)

Sensor head mounting direction

- To obtain the greatest precision, the sensor head should be oriented facing the direction of movement of the object's surface, as shown in the figure below.

Object with variations in material or color

<Correct> <Incorrect>

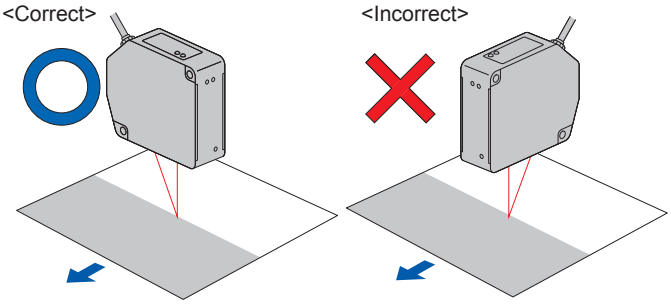

Rotating object

<Correct> <Incorrect>

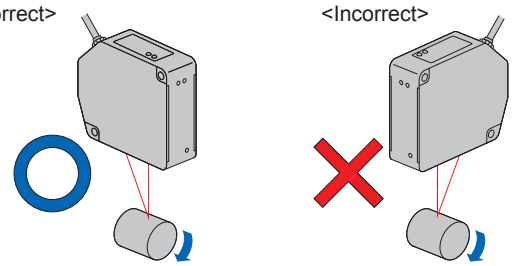

Object that has large differences in gaps, grooves and colors

<Correct> <Incorrect>

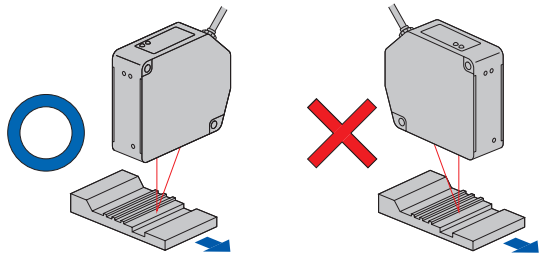

Safety standards for laser beam products

- A laser beam can harm human being's eyes, skin, etc., because of its high energy density. IEC has classified laser products according to the degree of hazard and the stipulated safety requirements. The **HL-C2** series is classified as Class 1 / Class 2 / Class 3R laser. (Refer to p.1499~ for information about laser beam.)

Safe use of laser products

- For the purpose of preventing users from suffering injuries by laser products, IEC 60825-1(Safety of laser products). Kindly check the standards before use. (Refer to p.1499~ for information about laser beam.)

PRECAUTIONS FOR PROPER USE

Refer to p.1501 for general precautions and p.1499~ for information about laser beam.

Fuctional description

Sensor head

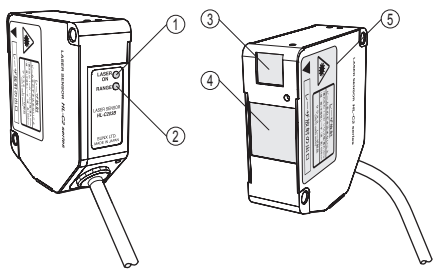

	Description	Function
①	Laser emission indicator (Green LED)	Lights up during laser emission.
②	Measurement range indicator (Yellow LED)	Lights up when the target reaches at approximately center of the measurement. Blinks when the target enters within the measurement range. Turns off the light when the target goes out of the measurement range.
③	Light emitter	Emits the laser light.
④	Light receiver	Receives the laser specular light from a measurement target.
⑤	Warning label	Shows the laser emission position. Please read carefully before use.

Controller

HL-C2C(-P)

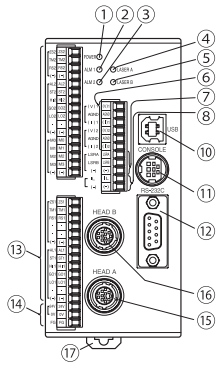

HL-C21C(-P)

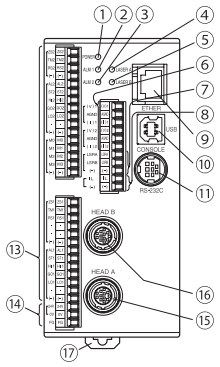

	Description	Function
①	POWER indicator	Lights up in green when electricity is provided to the controller.
②	ALM1 (Alarm) indicator	Abnormal condition indicator for OUT1. Lights up in red during dark status (poor light intensity) of OUT1 or the sensor head is in unconnected status.
③	ALM2 (Alarm) indicator	Abnormal condition indicator for OUT2. Lights up in red during dark status (poor light intensity) of OUT2 or the sensor head is in unconnected status.
④	LASER A indicator	Lights up in green during the laser radiation of Head A.
⑤	LASER B indicator	Lights up in green during the laser radiation of Head B.
⑥	Analog output terminal	Terminal for analog data output.
⑦	Laser control terminal	Stops laser emission in case of short-circuiting.
⑧	Remote interlock terminal	Stops laser emission when its opened.
⑨	Ethernet connector	Built into **HL-C21C**(**E**), **HL-C21C**(**E**)**-P**. Used for communication with the control devices using Ethernet.
⑩	USB connector	Used for communication with PC using USB.
⑪	Console connection connector	Used for connecting the mini console.
⑫	RS-232C connector	Built into **HL-C2C**(**E**), **HL-C2C**(**E**)**-P**. Used for communication with the control devices using RS-232C.
⑬	I/O terminal	Terminal for various I/O. Used for communication with the control devices using Ethernet and memory change.
⑭	Power terminal	Terminal for power supply to the controller.
⑮	Sensor head A connection connector	Controller recognizes a sensor head which is connected to this connector as “Sensor head A” and starts operation.
⑯	Sensor head B connection connector	Controller recognizes a sensor head which is connected to this connector as “Sensor head B” and starts operation.
⑰	DIN rail mounting hook	Used for hooking/removing the sensor heads to/from the 35mm width DIN rail with one-touch simple operation.

Note: In case of connecting one sensor head to the controller, be sure to connect the sensor head to ⑮ the sensor head A connection (HEAD A) side. If the sensor head is connected to ⑯ the sensor head B connection (HEAD B) side, the measurement cannot be performed.

DIMENSIONS (Unit: mm in)

The CAD data in the dimensions can be downloaded from our website.

HL-C201F(E) HL-C201F(E)-MK

Sensor head

Set mode: Specular reflection

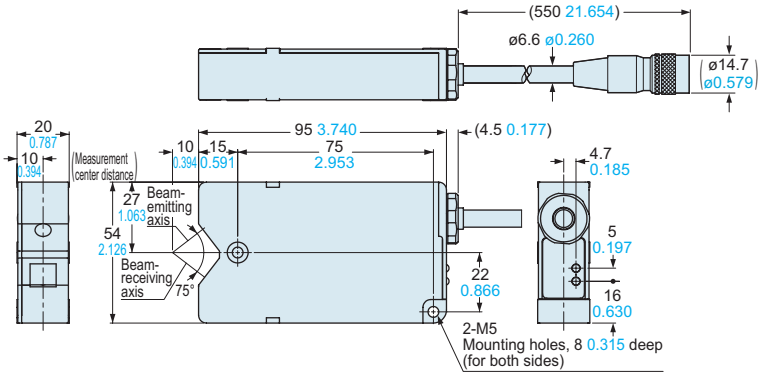

HL-C203F(E) HL-C203F(E)-MK

Sensor head

Set mode: Diffuse reflection

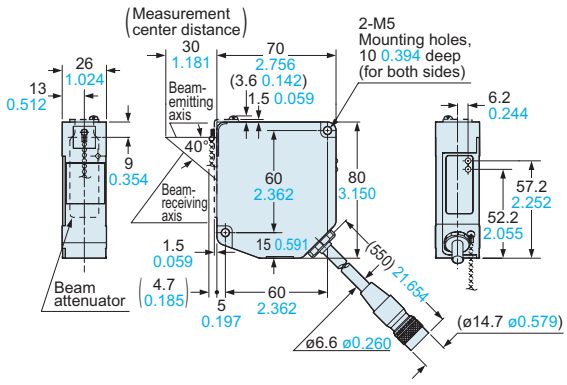

Set mode: Specular reflection

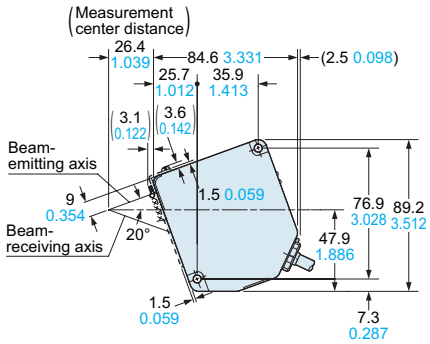

HL-C211F□(E) HL-C211F□(E)-MK

Sensor head

Set mode: Diffuse reflection

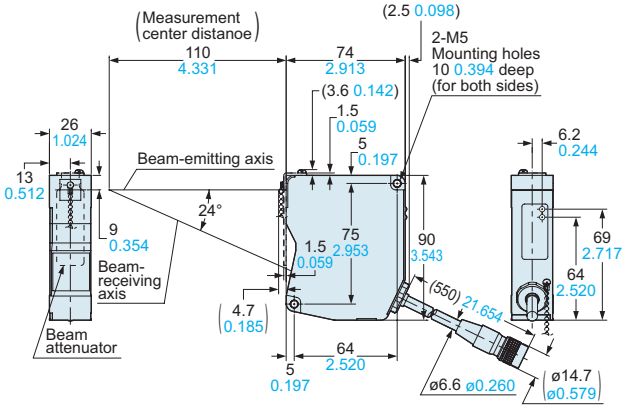

Set mode: Specular reflection

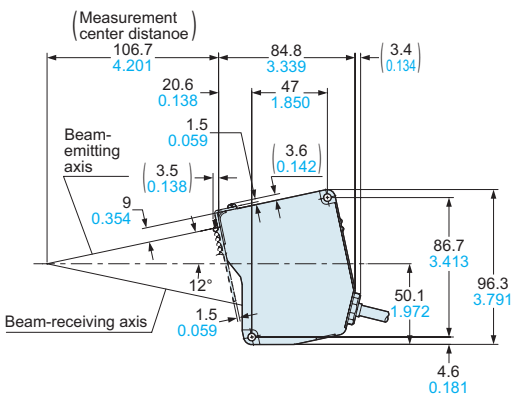

DIMENSIONS (Unit: mm in)

The CAD data in the dimensions can be downloaded from our website.

HL-C2C(E) HL-C2C(E)-P HL-C21C(E) HL-C21C(E)-P

Controller

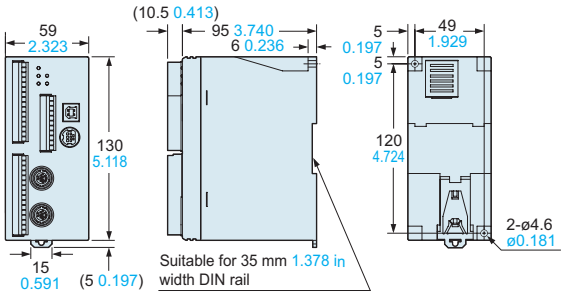

HL-C2F01

ND filter

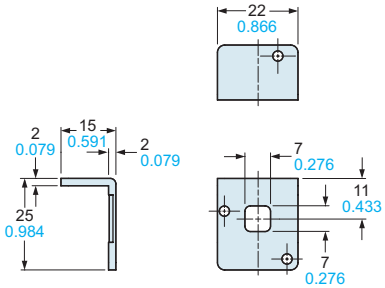

Material: Alminum (Mounting retention)
Glass (ND part)

Mounting drawing with a sensor head

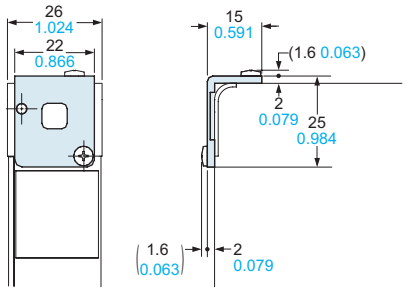

Notes: 1) Mounting cannot be preformed when the beam attenuator of the sensor head is in use.
2) **HL-C201F□(-MK)** cannot be mounted.
3) Do not mount it in using a beam attenuator.