Chipsmall Limited consists of a professional team with an average of over 10 year of expertise in the distribution of electronic components. Based in Hongkong, we have already established firm and mutual-benefit business relationships with customers from,Europe,America and south Asia,supplying obsolete and hard-to-find components to meet their specific needs.

With the principle of “Quality Parts,Customers Priority,Honest Operation,and Considerate Service”,our business mainly focus on the distribution of electronic components. Line cards we deal with include Microchip,ALPS,ROHM,Xilinx,Pulse,ON,Everlight and Freescale. Main products comprise IC,Modules,Potentiometer,IC Socket,Relay,Connector.Our parts cover such applications as commercial,industrial, and automotives areas.

We are looking forward to setting up business relationship with you and hope to provide you with the best service and solution. Let us make a better world for our industry!

Contact us

Tel: +86-755-8981 8866 Fax: +86-755-8427 6832
Email & Skype: info@chipsmall.com Web: www.chipsmall.com
Address: A1208, Overseas Decoration Building, #122 Zhenhua RD., Futian, Shenzhen, China

LOADING PATTERN MATING SIDE

	01	02	03	04	05	06	07	08	09	10	11	12	13	14	15	16	17	18	19	20	21	22	23	24	25
y	0	0	0	0	0	0	0	0	0	0	0				0	0	0	0	0	0	0	0	0	0	0
h	5	5	5	5	6	5	5	5	5	6	5				5	5	5	6	5	5	5	5	6	5	5
g	5	5	5	5	6	5	5	5	5	6	5				5	5	5	6	5	5	5	5	6	5	5
f	6	6	6	6	5	6	6	6	6	5	6				6	6	6	5	6	6	6	6	5	6	6
e	5	5	5	5	6	5	5	5	5	6	5				5	5	5	6	5	5	5	5	6	5	5
d	5	5	5	5	6	5	5	5	5	6	5				5	5	5	6	5	5	5	5	6	5	5
c	6	6	6	6	5	6	6	6	6	5	6				6	6	6	5	6	6	6	6	5	6	6
b	5	5	5	5	5	5	5	5	5	5	5				5	5	5	5	5	5	5	5	5	5	5
a	5	5	5	5	6	5	5	5	5	6	5				5	5	5	6	5	5	5	5	6	5	5
z	0	0	0	0	0	0	0	0	0	0	0				0	0	0	0	0	0	0	0	0	0	0
POS	01				05					10					15					20					25	

LOADED CONNECTOR ASSEMBLY
(FOR EXAMPLE)

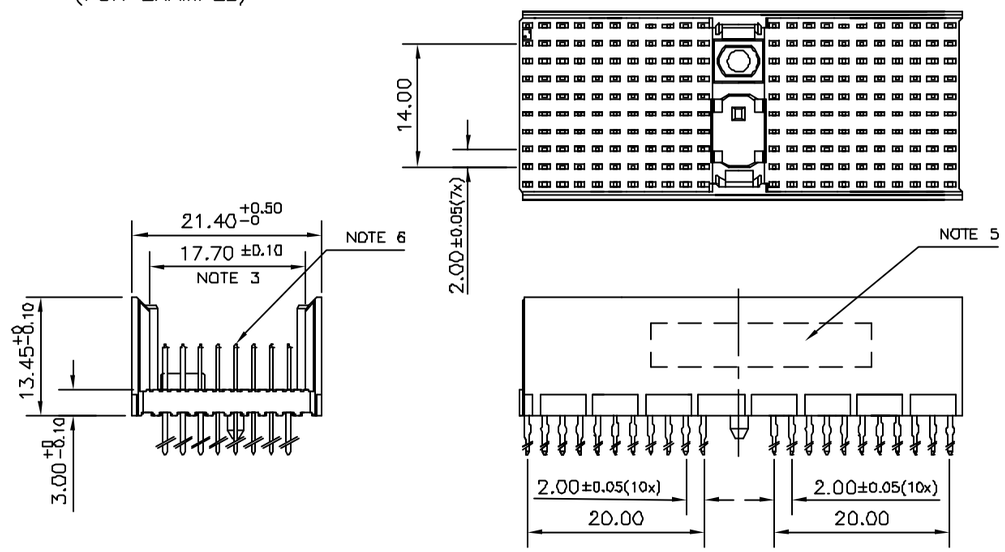

CONTACT OVERVIEW

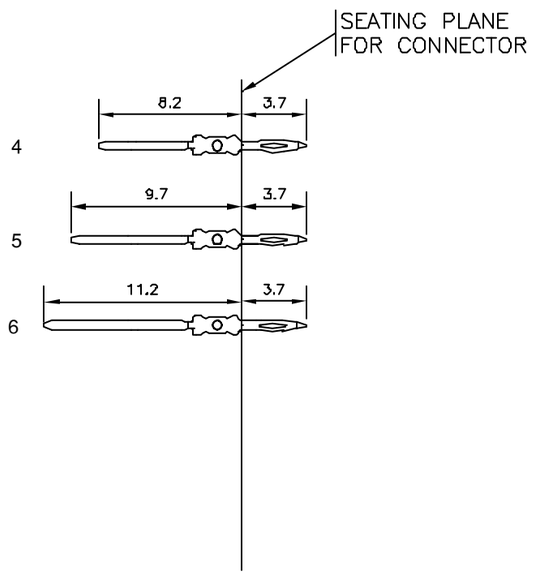

LAY-OUT P.C.B.-HOLE

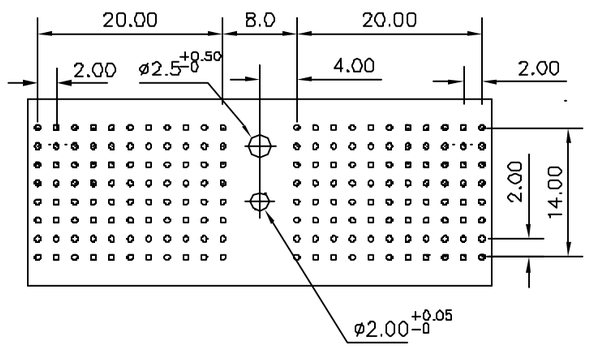

HM2P87PD81A0-□-

LEAD FREE INDICATOR : LF = LEAD FREE
(DIGIT 15 & 16)

PLATING CODE (DIGIT 13 AND 14)
(REF DRW NO. BS,C , 201844 , 003)

NOTES

1. THIS PRODUCT IS CSA APPROVED.
2. THIS PRODUCT IS UL RECOGNIZED.
3. MEASURED AT THE BOTTOM.
4. MATERIAL CONTACT: PHOSPHORBRONZE
   HOUSING: CREAM WHITE GLASS FILLED POLYESTER UL-94V0
5. CONNECTOR PRINTED WITH P/N AND DATE CODE.
6. FOR ACTUAL CONTACT LOADINGS, SEE LOADING PATTERN MATING SIDE.
7. SHAPE OF CONNECTOR HOUSING CAN ALTER DEPENDING ON PRODUCTION LOCATION
8. THE PRODUCT (LF) MEETS EUROPEAN UNION DIRECTIVES AND OTHER COUNTRY REGULATIONS AS DESCRIBED IN GS-22-008
9. FOR RECOMMENDED PTH DIMENSIONS REFER DRAWING : BS, A , 201572 , 001

PART NO: HM2P87PD81A0----

ltr	ecn no	dr	date
A	I05-0253	MINI	2005-11-30
B	I06-0132	MINI	2006-08-02

dr	MINI K VANDANATH	2005-11-30
engr	BIJU K PAUL	2005-11-30
chr	BIJU K PAUL	2006-08-02
appd	BIJU K PAUL	2006-08-02

mat'l. code: SEE NOTE 4
surface: ISO 1302
tolerance: ISO 406 ISO 1101
tolerances unless otherwise specified: angles 0°±1°; linear .0±0.2; .00±0.1
projection
MM
scale —
product family: MILLIPACS
title: MPACS B+2R STR HDR PF CONN TYPE D
dwg no: BS, C ,203028,594
sheet 1 of 1
size: A3
type: Product Customer Drawing
sheet index: revision B; sheet 1

FCIconnect.com
Copyright FCI

form: A3