Chipsmall Limited consists of a professional team with an average of over 10 year of expertise in the distribution of electronic components. Based in Hongkong, we have already established firm and mutual-benefit business relationships with customers from,Europe,America and south Asia,supplying obsolete and hard-to-find components to meet their specific needs.

With the principle of “Quality Parts,Customers Priority,Honest Operation,and Considerate Service”,our business mainly focus on the distribution of electronic components. Line cards we deal with include Microchip,ALPS,ROHM,Xilinx,Pulse,ON,Everlight and Freescale. Main products comprise IC,Modules,Potentiometer,IC Socket,Relay,Connector.Our parts cover such applications as commercial,industrial, and automotives areas.

We are looking forward to setting up business relationship with you and hope to provide you with the best service and solution. Let us make a better world for our industry!

Contact us

Tel: +86-755-8981 8866 Fax: +86-755-8427 6832
Email & Skype: info@chipsmall.com Web: www.chipsmall.com
Address: A1208, Overseas Decoration Building, #122 Zhenhua RD., Futian, Shenzhen, China

BS,C ,202261,001	C

GEN. ST.	01	02	03	04	05	06	07	08	0D	50	60	70	80	90
INT. ST.	10 11 12 13 14 18 20	31 32	33 34	38 39	40 42 43	44 45	46 48	56 70	72 73 75	76 81 82	83 84 88			

REV.	DATE	DESCRIPTION	BY	C'K'D'
A	2001-09-14	CONVERSION REVISION 03	KN	
B	2005-10-26	105-0205	ALEX B	BKP
C	2006-08-08	106-0144	ALEX B	BKP

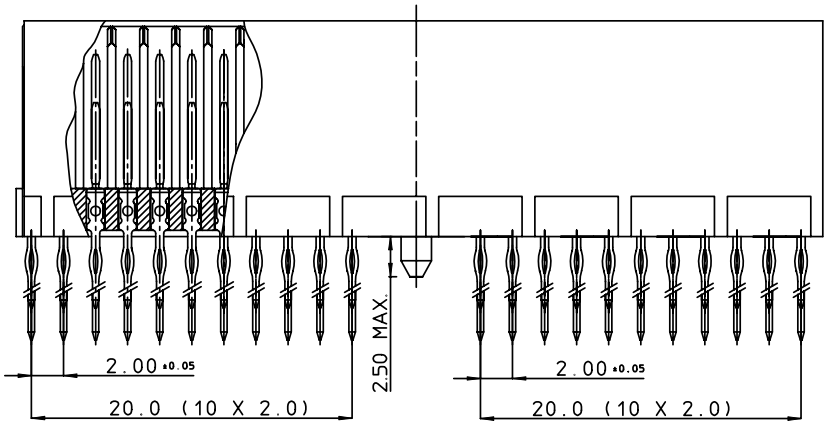

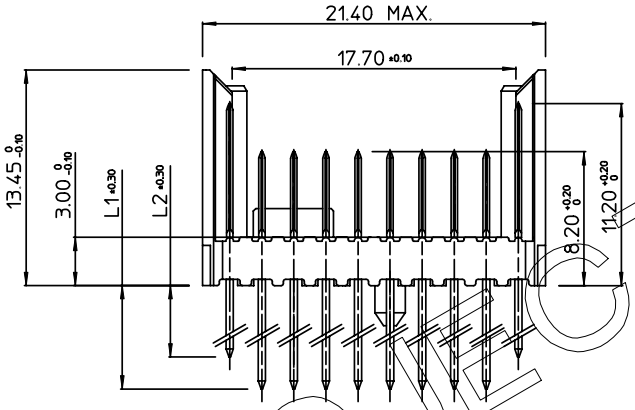

PERFORMANCE CHARACTERISTICS

CURRENT RATING : 1.5 A AT 20°C (FULLY LOADED)
1 A AT 70°C (FULLY LOADED)
RATED VOLTAGE : 500 V AC (CONT / CONT)
OPERATING TEMPERATURE : -55°C TO 125°C
CONTACT RESISTANCE : 20 mΩ MAX
INSERTION FORCE : 0.60 N MAX / CONT
EXTRACTION FORCE : 0.15 N MIN / CONT
INSULATION RESISTANCE : 10^4 MΩ MIN

CAT. NR.	L1 ±0.3	L2 ±0.3	DESCRIPTION
HM2P87PD8111----	3.7	3.7	SHORT PRESS-FIT
HM2P87PC8111----	4.5	4.5	SHORT PRESS-FIT
HM2P87PK8111----	13	4.5	REAR PLUG-UP: LEVEL 1
HM2P87PM8111----	14.5	4.5	REAR PLUG-UP: LEVEL 2
HM2P87PN8111----	16	4.5	REAR PLUG-UP: LEVEL 3
HM2P87PT8111----	13	4.5	WIRE WRAP

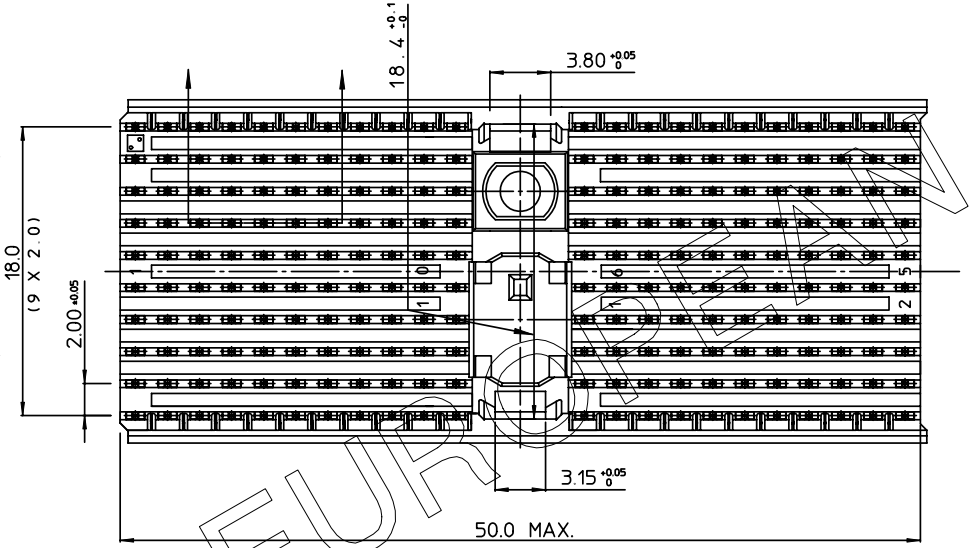

NOTES

1. "HM2P87P#8111----"
   - PERFORMANCE LEVEL INDICATOR (REFER DWG No. BS,C ,201844,003)
   - LEAD FREE INDICATOR : LF=LEAD FREE (DIGIT 15&16)
2. THIS PRODUCT IS CSA APPROVED.
   THIS PRODUCT IS UL RECOGNIZED.
3. FOR RECOMMENDED PTH DIMENSIONS REFER DRAWING : BS,A ,201572,001
4. THE PRODUCT (LF) MEETS EUROPEAN UNION DIRECTIVES AND OTHER COUNTRY REGULATIONS AS DESCRIBED IN GS-22-008

LAY-OUT
P.C.B.- HOLE

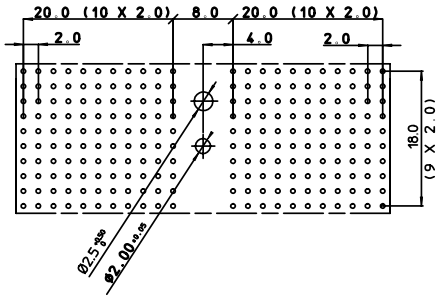

THIS IS OUR EXCLUSIVE PROPERTY. IT IS NOT TO BE COPIED, REPRINTED OR DISCLOSED TO A THIRD PARTY, NOR USED FOR MANUFACTURING WITHOUT OUR WRITTEN CONSENT, AND HAS TO BE RETURNED TO US IN CASE OF NO USAGE

DIT IS ONZE EIGENDOM EN MAG NOCH NAGEMAAKT, HERDRUKT, OVERGEMAAKT AAN DERDEN, NOCH VOOR FABRIKATIE GEBRUIKT WORDEN, ZONDER ONZE SCHRIFTELIJKE TOELATING. BIJ NIET GEBRUIK IS TERUGZENDING VERPLICHT.

MALE SIGNAL STRAIGHT PRESS-FIT-TO-BOARD CONNECTOR
WITH SERVICECENTER (WIDE BODY)

1DEC ±0,2
2DEC ±0,1
ANGLES ±1°

	APPR.	DATE	SIGN.
	DRAFT	1996-04-29	W.Panis
	CHECKED		
	PROD. MGR.		
	PR.ENG.MGR.		
	PR.MGT.MGR.		

MILLIPACS 2 / TYPE D (8 ROW) / SHIELDED

CAT. No. HM2P87P#8111----

WE RESERVE THE RIGHT TO CHANGE DIMENSIONS OR REQUIREMENTS WITHOUT PRIOR NOTICE.

ALL DIMENSIONS IN MM

REFERENCES

FCI www.fciconnect.com

SCALE 3/1

BS,C ,202261,001 — DRAWING No.
C — REVISION
CUSTOMER DRAWING

PDM: Rev:C STATUS: Released Printed: Dec 02, 2007

EUROPEAN PROJECT