Chipsmall Limited consists of a professional team with an average of over 10 year of expertise in the distribution of electronic components. Based in Hongkong, we have already established firm and mutual-benefit business relationships with customers from,Europe,America and south Asia,supplying obsolete and hard-to-find components to meet their specific needs.

With the principle of “Quality Parts,Customers Priority,Honest Operation,and Considerate Service”,our business mainly focus on the distribution of electronic components. Line cards we deal with include Microchip,ALPS,ROHM,Xilinx,Pulse,ON,Everlight and Freescale. Main products comprise IC,Modules,Potentiometer,IC Socket,Relay,Connector.Our parts cover such applications as commercial,industrial, and automotives areas.

We are looking forward to setting up business relationship with you and hope to provide you with the best service and solution. Let us make a better world for our industry!

Contact us

Tel: +86-755-8981 8866 Fax: +86-755-8427 6832
Email & Skype: info@chipsmall.com Web: www.chipsmall.com
Address: A1208, Overseas Decoration Building, #122 Zhenhua RD., Futian, Shenzhen, China

REV.	DESCRIPTION/ECO NO.	DATE
	RELEASED TO CAD	9/19/03

DEGREES ARE FOR REFERENCE ONLY

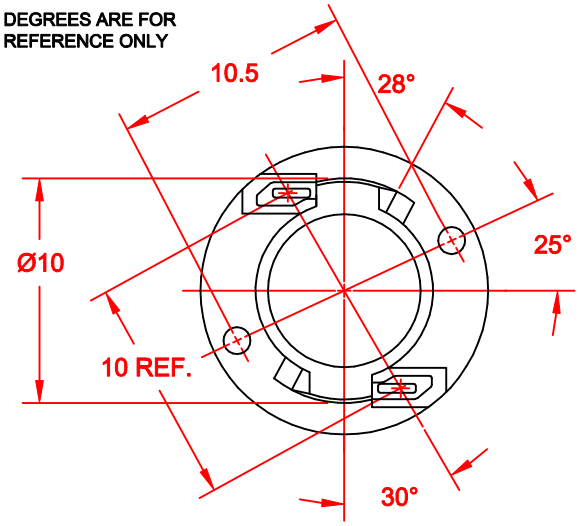

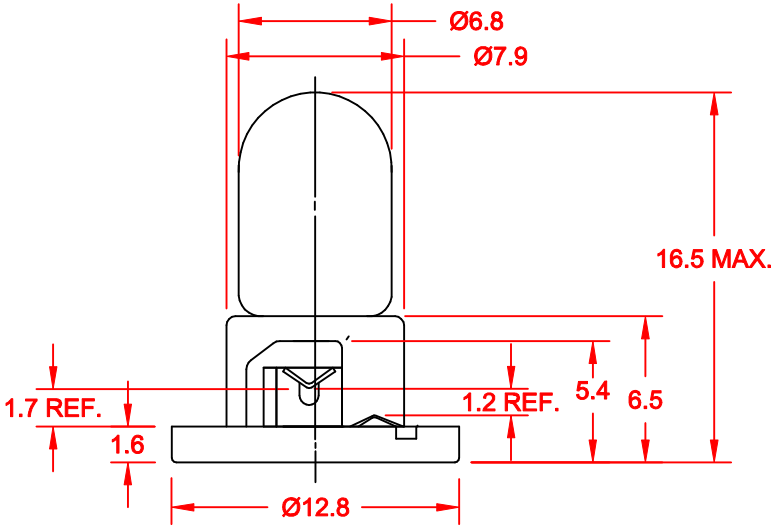

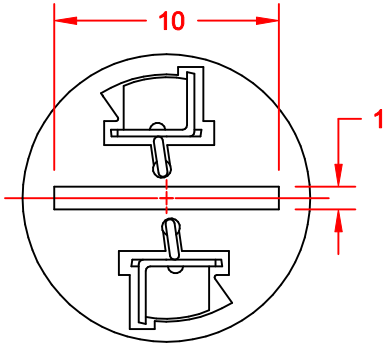

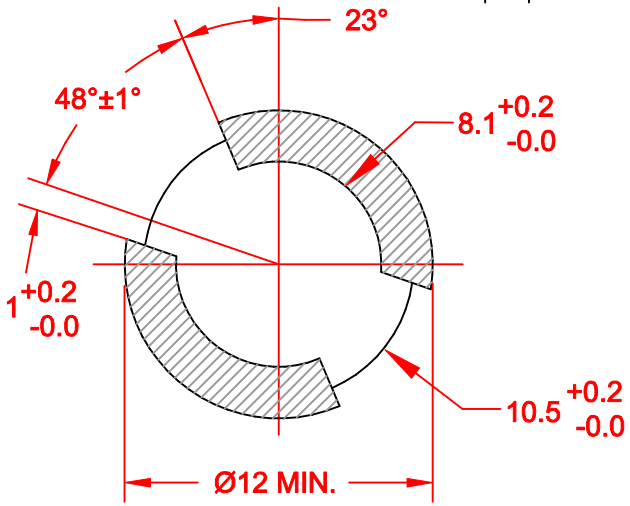

PC BOARD PUNCH PATTERN

JKL LAMP NUMBER	VOLTS RATED	AMPS ±10%	MSCP ±25%	LUMENS ±25%	MINIMUM LIFE HRS.	FILAMENT TYPE
HNW21-HW01	14.0	.240	2.00	25.00	2,500 DC	C-2R

METRIC THIRD ANGLE PROJECTION	DIMENSIONS ARE IN MILLIMETERS TOLERANCE UNLESS OTHERWISE SPECIFIED 1 PL +/- 0.2 2 PL +/- 0.20 ANGLE +/- 0	JKL COMPONENTS CORPORATION TITLE T-2 GAS FILLED DUAL CONTACT NEO-WEDGE				
DRAWN BY L. WENGSTROM	APPV'D BY J.K. DATE 9/19/03	SIZE A	FSCM NO. 55335	DRAWING NO. HNW21-HW01		
- CAD DRAWING - MANUAL REVISIONS NOT PERMITTED		SCALE NONE	RELEASED DATE 9/19/03	REVISION DATE	REV. NO.	SHEET 1 OF 1