Chipsmall Limited consists of a professional team with an average of over 10 year of expertise in the distribution of electronic components. Based in Hongkong, we have already established firm and mutual-benefit business relationships with customers from,Europe,America and south Asia,supplying obsolete and hard-to-find components to meet their specific needs.

With the principle of “Quality Parts,Customers Priority,Honest Operation,and Considerate Service”,our business mainly focus on the distribution of electronic components. Line cards we deal with include Microchip,ALPS,ROHM,Xilinx,Pulse,ON,Everlight and Freescale. Main products comprise IC,Modules,Potentiometer,IC Socket,Relay,Connector.Our parts cover such applications as commercial,industrial, and automotives areas.

We are looking forward to setting up business relationship with you and hope to provide you with the best service and solution. Let us make a better world for our industry!

Contact us

Tel: +86-755-8981 8866 Fax: +86-755-8427 6832
Email & Skype: info@chipsmall.com Web: www.chipsmall.com
Address: A1208, Overseas Decoration Building, #122 Zhenhua RD., Futian, Shenzhen, China

This document is the property of Amphenol Corporation and is delivered on the express condition that it is not to be disclosed, reproduced or used, in whole or in part, for manufacture or sale by anyone other than Amphenol Corporation without its prior concert, & that no right is granted to disclose or to use any information in this document.

REVISIONS				
SYM	ECN	DESCRIPTION	DATE	APPROVED
A	HK7019	RELEASE TO MANUFACTURE	12/10'13	IP
B	HK7032	ADD A DIMENSION FOR LID(6#)	01/15'14	IP

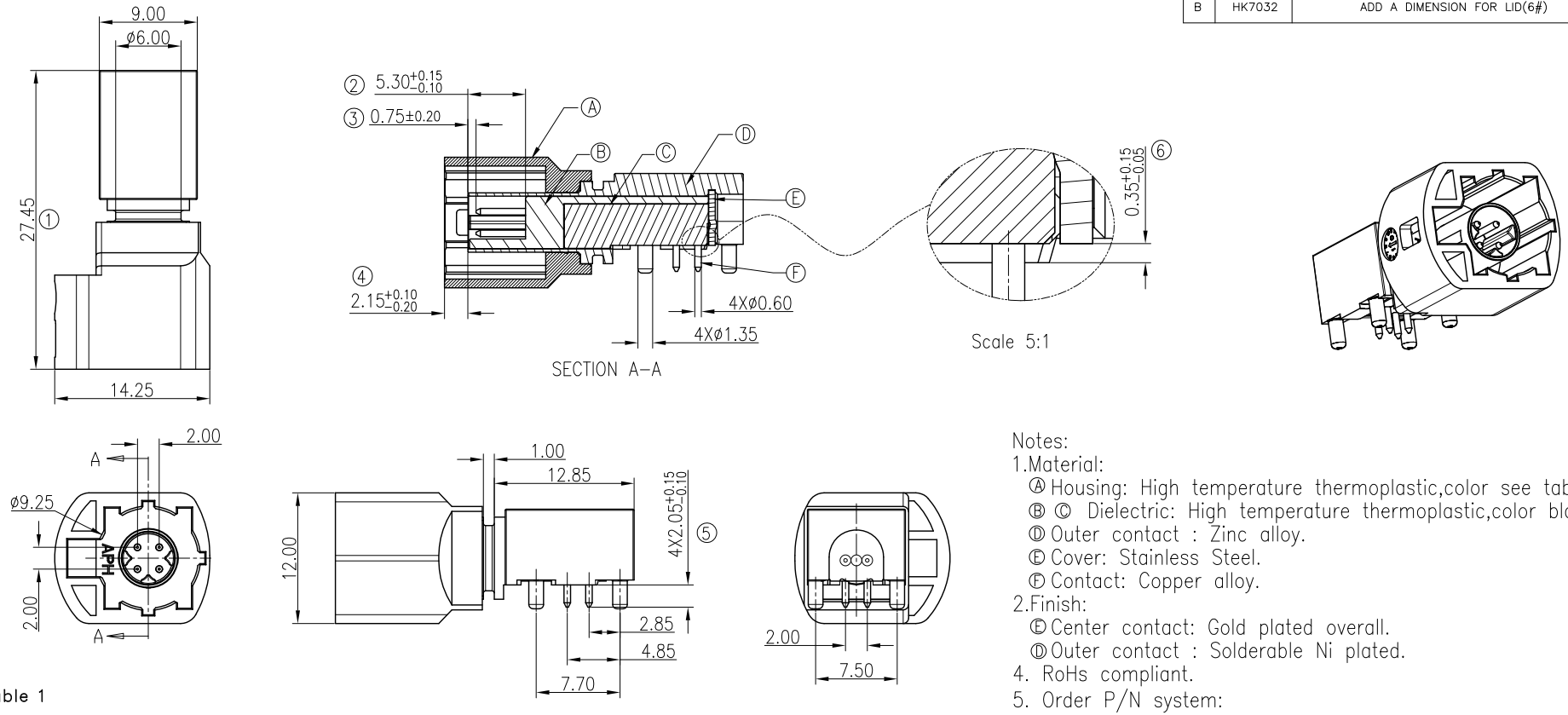

Notes:

1.Material:
- Ⓐ Housing: High temperature thermoplastic,color see table 1.
- Ⓑ Ⓒ Dielectric: High temperature thermoplastic,color black.
- Ⓓ Outer contact : Zinc alloy.
- Ⓔ Cover: Stainless Steel.
- Ⓕ Contact: Copper alloy.

2.Finish:
- Ⓔ Center contact: Gold plated overall.
- Ⓓ Outer contact : Solderable Ni plated.

4. RoHs compliant.
5. Order P/N system:

HSD−WXRP−PCB−12X

Coding: See table 1

Packing method:
- A− Packing by tape & reel
- B− Packing by tray
- C− Single Packing

Table 1

Plug	Coding	Color	Ral
	A	Black	9005
	B	White	9001
	C	Blue	5005
	D	Claret	4004
	E	Green	6002
	F	Brown	8011
	Z	Waterblue	5021

Plug	Coding	Color	Ral
	G	Grey	7031
	H	Violet	4003
	J	Beige	1001
	K	Curry	1027
	L	Yellow green	6018
	M	Pastel orange	2003
	O	Light green	6027

Amphenol Shenzhen RoHS Compliant 2011/65/EU

MANUFACTURE DRAWING

UNLESS OTHERWISE SPECIFIED
TOLERANCES

	U.S.	METRIC
.X +/−		0.50
.XX +/−		0.25
.XXX +/−		0.20
FRACTIONS +/−		
ANGLES +/−		5°

FOR MATERIALS AND FINISHES SEE NOTES

REMOVE SHARP EDGES

DIMENSIONS

U.S.	INCHES
METRIC	MM

APPROVAL		DATE
DRAWN	Kaka Yang	01/15'13
CHECKED	Dam He	01/15'13
CHECKED		

DRAWING FILE : S:\PE Master\DRAWING\HSD\MHSDWXRPPCB12X.DWG

ANGLE OF PROJECTION

Amphenol

TITLE
HSD R/A LOWER PROFILE PLUG CONNECTOR
WEST LOCATION

SIZE	DRAWING NO.	REV.
A4	M HSD−WXRP−PCB−12X	B
SCALE 1:1	SHEET 1 OF 1	