Chipsmall Limited consists of a professional team with an average of over 10 year of expertise in the distribution of electronic components. Based in Hongkong, we have already established firm and mutual-benefit business relationships with customers from,Europe,America and south Asia,supplying obsolete and hard-to-find components to meet their specific needs.

With the principle of “Quality Parts,Customers Priority,Honest Operation,and Considerate Service”,our business mainly focus on the distribution of electronic components. Line cards we deal with include Microchip,ALPS,ROHM,Xilinx,Pulse,ON,Everlight and Freescale. Main products comprise IC,Modules,Potentiometer,IC Socket,Relay,Connector.Our parts cover such applications as commercial,industrial, and automotives areas.

We are looking forward to setting up business relationship with you and hope to provide you with the best service and solution. Let us make a better world for our industry!

Contact us

Tel: +86-755-8981 8866 Fax: +86-755-8427 6832
Email & Skype: info@chipsmall.com Web: www.chipsmall.com
Address: A1208, Overseas Decoration Building, #122 Zhenhua RD., Futian, Shenzhen, China

THIS COPY IS PROVIDED ON A RESTRICTED BASIS AND IS NOT TO BE USED IN ANY WAY DETRIMENTAL TO THE INTERESTS OF PANDUIT CORP.

NOTES:
1. INDUSTRIAL USB COUPLER MODULE
2. USB 2.0 COMPLIANT AND BACKWARDS COMPATIBLE TO USB 1.1
3. ACCEPTS (2) USB PATCH CORDS
4. DIMENSIONS IN PARENTHESES ARE METRIC.
5. MOUNTS IN COMMON NEMA 1-13/64"(30.5mm) DIAMETER ENCLOSURE OPENING.
6. MOUNTS IN PANEL THICKNESS OF .035" TO .135"
7. INTRUSION PROTECTION RATED TO IP67

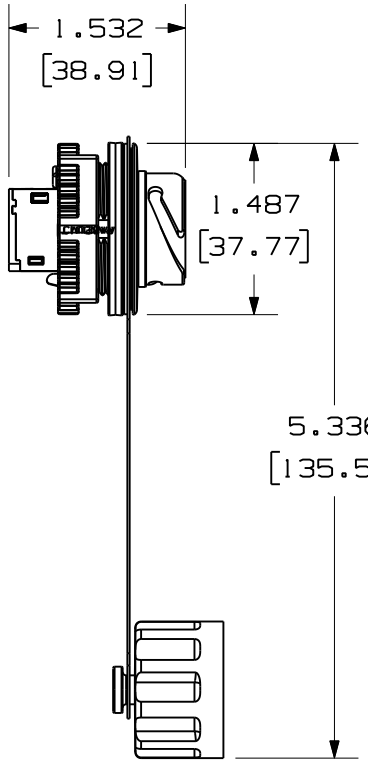

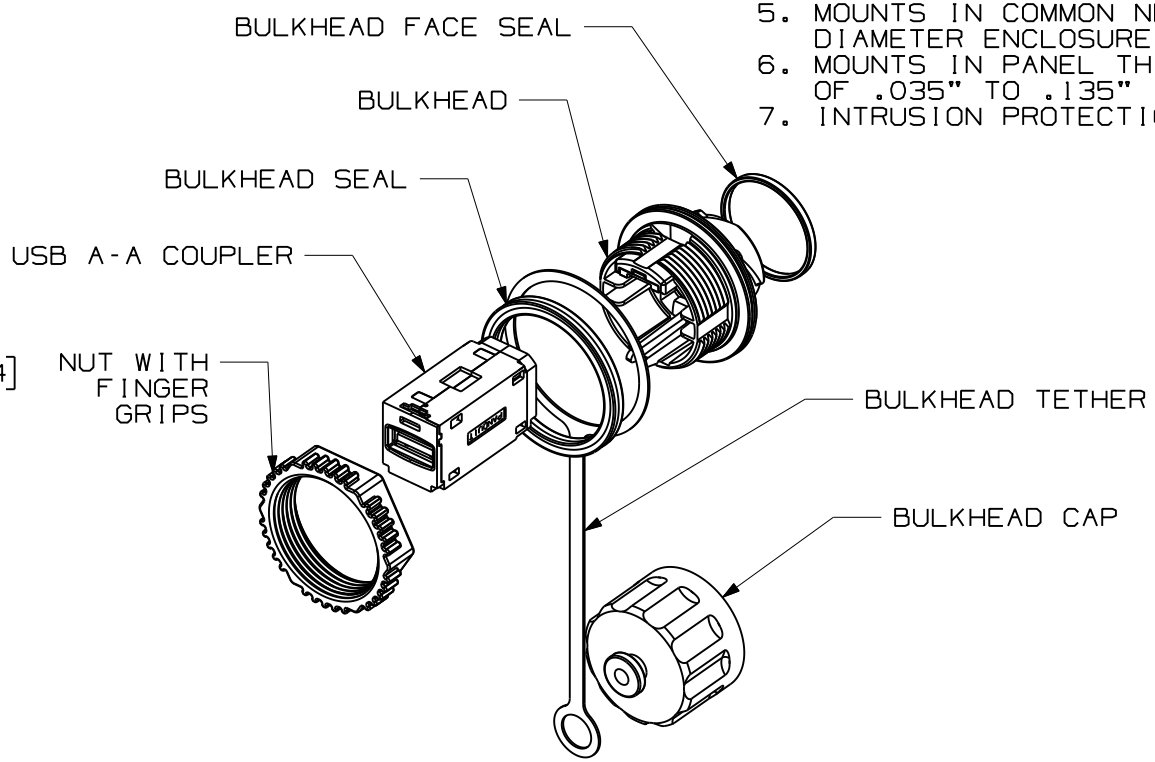

R	2-21-12	BJN	JCO	RELEASED TO PRODUCTION	02731-17	JCO	EJH		
REV	DATE	BY	CHK	DESCRIPTION	ECN - R		CUST	SUP	OTH

MODEL FILENAME: M02731AV/00

DRAWING FILENAME: M02731AV_DC19/00A

SIZE: A

INDUSTRIALNET USB A-A COUPLER WITH BULKHEAD CUSTOMER DRAWING

PANDUIT®
TINLEY PARK, IL 60487

THIRD ANGLE PROJECTION

ALL DIMENSIONS ARE GIVEN IN INCHES, UNLESS OTHERWISE SPECIFIED.
DIMENSIONAL TOLERANCES ARE:
(.X) ± (.XXX) ±.010(.25)
(.XX) ±.031(.8) ANGLES ±

DRAWN BY: BJN
DATE: 2-21-12
CHK'D: JCO

REVIEW DRAWING NUMBERS

MAT'L

I.I. NUMBER

PRODUCT SPEC/ PKG SPEC

ASSY METHOD/ TEST METHOD

SCALE

PART NO.: IAEBHUSBAA

DRAWING NO.: 02731-19