Chipsmall Limited consists of a professional team with an average of over 10 year of expertise in the distribution of electronic components. Based in Hongkong, we have already established firm and mutual-benefit business relationships with customers from,Europe,America and south Asia,supplying obsolete and hard-to-find components to meet their specific needs.

With the principle of “Quality Parts,Customers Priority,Honest Operation,and Considerate Service”,our business mainly focus on the distribution of electronic components. Line cards we deal with include Microchip,ALPS,ROHM,Xilinx,Pulse,ON,Everlight and Freescale. Main products comprise IC,Modules,Potentiometer,IC Socket,Relay,Connector.Our parts cover such applications as commercial,industrial, and automotives areas.

We are looking forward to setting up business relationship with you and hope to provide you with the best service and solution. Let us make a better world for our industry!

Contact us

Tel: +86-755-8981 8866 Fax: +86-755-8427 6832
Email & Skype: info@chipsmall.com Web: www.chipsmall.com
Address: A1208, Overseas Decoration Building, #122 Zhenhua RD., Futian, Shenzhen, China

THIS COPY IS PROVIDED ON A RESTRICTED BASIS AND IS NOT TO BE USED IN ANY WAY DETRIMENTAL TO THE INTERESTS OF PANDUIT CORP.

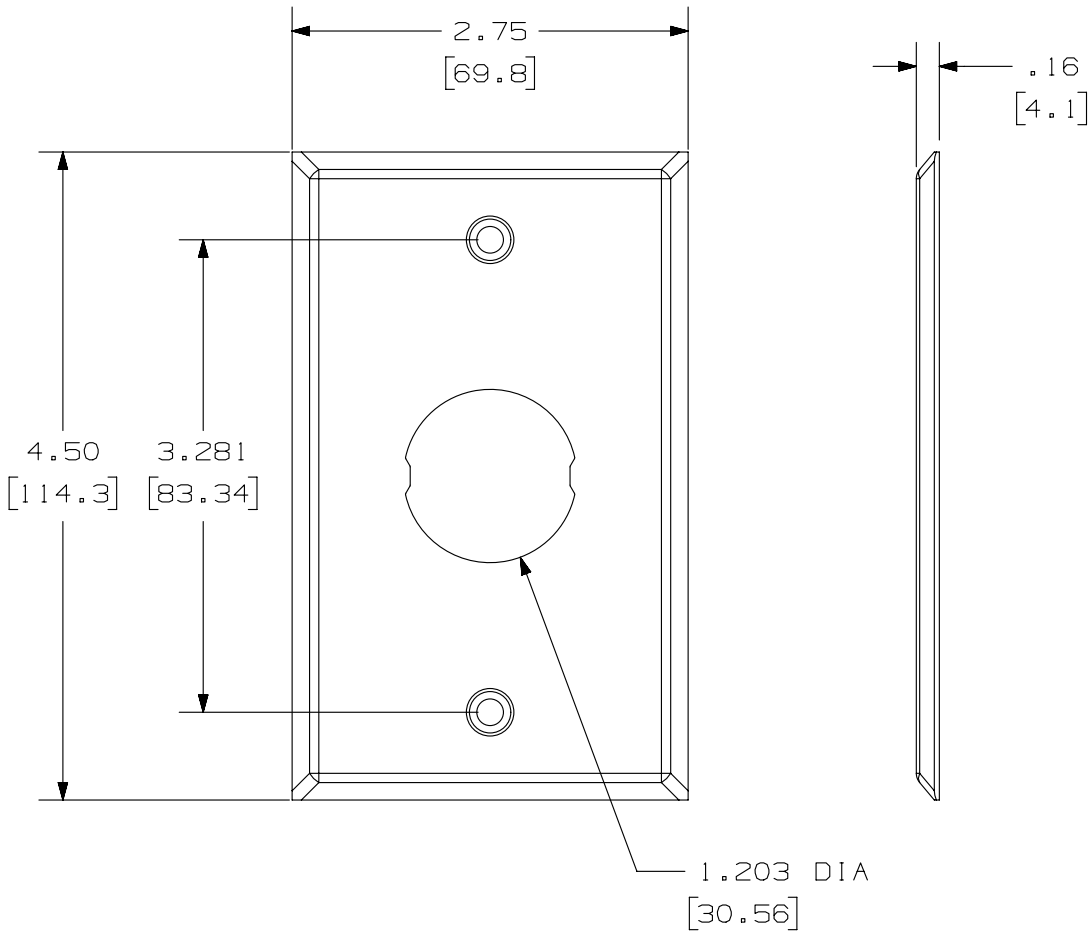

PANDUIT P/N	WEIGHT
IAEFP1	1.22 LB/10 PCS (552.5 g/10 PCS)

NOTES:
1. SEE CURRENT CATALOG FOR ADDITIONAL PART NUMBER SUFFIXES TO INDICATE COLOR AND OR PACKAGE QUANTITY.
2. SEE CATALOG FOR COMPLETE LIST OF PARTS APPLICABLE FOR USE WITH THIS PART.
3. DIMENSIONS IN PARENTHESES ARE IN METRIC.
4. PART INCLUDES:
   - 2- MOUNTING SCREW WITH RUBBER O-RING
   - 1- FACEPLATE
   - 1- FACEPLATE GASKET

REV	DATE	BY	CHK	APR	DESCRIPTION	ECN
01	5-17-14	TA	REFR	REFR	REVISED TITLE BLOCK	00741-98
R	6-13-06	JSP	JCO	JCO	RELEASED TO PRODUCTION	00741-98

PART NUMBER: SEE CHART

TITLE: INDUSTRIALNET 1 POSITION

CUSTOMER DRAWING

ITEM REVISION NAME: M00741LK/00

DATASET FILE NAME: M00741LK_DC/00B

UNLESS OTHERWISE SPECIFIED, DIMENSIONAL TOLERANCES ARE: IN [mm]

.X ± .XXX ± .010 [.3]

.XX ± .03 [.8] ANGLES ±

THIRD ANGLE PROJECTION

MATERIAL: FACEPLATE: 304 S.S GASKET: RUBBER

DRAWING NUMBER: 00741-98

DRAWN BY	DATE	CHK	SCALE	SHT 1 OF 1	SIZE
JSP	6-13-06	JCO	NONE		A

D10100DA/14