Chipsmall Limited consists of a professional team with an average of over 10 year of expertise in the distribution of electronic components. Based in Hongkong, we have already established firm and mutual-benefit business relationships with customers from,Europe,America and south Asia,supplying obsolete and hard-to-find components to meet their specific needs.

With the principle of “Quality Parts,Customers Priority,Honest Operation,and Considerate Service”,our business mainly focus on the distribution of electronic components. Line cards we deal with include Microchip,ALPS,ROHM,Xilinx,Pulse,ON,Everlight and Freescale. Main products comprise IC,Modules,Potentiometer,IC Socket,Relay,Connector.Our parts cover such applications as commercial,industrial, and automotives areas.

We are looking forward to setting up business relationship with you and hope to provide you with the best service and solution. Let us make a better world for our industry!

Contact us

Tel: +86-755-8981 8866 Fax: +86-755-8427 6832
Email & Skype: info@chipsmall.com Web: www.chipsmall.com
Address: A1208, Overseas Decoration Building, #122 Zhenhua RD., Futian, Shenzhen, China

OMRON

Motor Protection Circuit Breaker (MPCB)
J7MN

MPCB system (motor protection CLASS 10)

- Rotary and switch types
- Rated operational current = 12 A, 25 A and 50 A
- Switching capacity up to 12.5 A = 100 kA/400 V
- Fixed short-circuit release = 13 x I_u
- Overload release adjustable 0.7 - 1 x I_u
- Single phasing sensivity

Auxiliary contact modules

- ON/OFF indication for MPCB front mounting and side mounting
- Trip indication for MPCB side mounting

Accessoires

- Undervoltage release
- Shunt release
- Three phase busbar system up to 5 MPCB
- Moulded plastic enclosures (IP55)
- Moulded plastic front plates (IP55)
- Door coupling rotary mechanisms (black and red/yellow)

Approved Standards

Standard	Guide No (US,C)
UL	see page 89
ICE 947-5-1	
VDE 0660	
EN 60947-5-1	

Ordering Information

■ Model Number Legend

1. Motor Protection Circuit Breaker (MPCB)

J7MN-□□-□□□
1 2 3

1) Motor Protection Circuit Breaker (MPCB)
2) Type
   12: Switch type (0.11 - 12 A)
   25: Rotary type (0.16 - 25 A)
   50: Rotary type (32 - 40 A)
3) Setting range (examples)
   E16: 0.11 - 0.16 A
   E2: 0.14 - 0.2 A
   16: 10 - 16 A
   ...

2. Aux. Contacts for MPCB

J73MN-□□□
1 2 3

1) Aux. Contact for MPCB
2) 11: 1 NO 1 NC
3) S: side mounting
   F: front mounting

J73MN-□-□□ □
1 2 3 4

1) Aux. Contact for MPCB
2) T: Trip indicating contact
3) 11: 1 NO 1 NC
4) S: side mounting

3. Accessories for MPCB

J74MN-□-□□
1 2 3

1) Accessories for MPCB
2) S: Shunt release
   U: Under voltage release
3) N1: 230 V 50 Hz / 240 V 60 Hz
   N2: 210 - 230 V 50/60 Hz

J74MN-□□ □□
1 2 3

1) Accessories for MPCB
2) PF: Enclosure IP55
   P: Module plastic front plate
   PH: Holder for front plate
3) 12: Switch type
   25: Rotary type

J74MN-□□-□□
1 2 3

1) Accessories for MPCB
2) DC: Door coupling rotary mechanism
3) B: black / gray
   RY: red / yellow

J74MN-□□-□/□
1 2 3

1) Accessories for MPCB
2) L3: 3-phase busbar system (45 mm modular spacing)
   DS: Shroud for unused terminal
3) 1/2: for 2 circuit breakers
   1/3: for 3 circuit breakers
   1/4: for 4 circuit breakers
   1/5: for 5 circuit breakers

J74MN-□□ □□
1 2 3

1) Accessories for MPCB
2) TC: Line side terminal
3) 12: for switch type
   25: for rotary type

■ System overview

Motor Protection Circuit Breaker (MPCB)

	Rated current In A	Suitable for motors*1 3~400V kW	Current setting range Thermal overload release A	Instantaneous short-circuit release A	Short-circuit breaking capacity at 3~400V kA	**Type**	Pack pcs.	Weight approx. kg/pcs.
Circuit-Breakers J7MN-12								
	0.16	-	0.11 – 0.16	2.1	100	**J7MN-12-E16**	1	0.21
	0.2	-	0.14 – 0.2	2.6	100	**J7MN-12-E2**	1	0.21
	0.25	0.06	0.18 – 0.25	3.3	100	**J7MN-12-E25**	1	0.21
	0.32	0.09	0.22 – 0.32	4.2	100	**J7MN-12-E32**	1	0.21
	0.4	-	0.28 – 0.4	5.2	100	**J7MN-12-E4**	1	0.21
	0.5	0.12	0.35 – 0.5	6.5	100	**J7MN-12-E5**	1	0.21
	0.63	0.18	0.45 – 0.63	8.2	100	**J7MN-12-E63**	1	0.21
	0.8	-	0.55 – 0.8	10	100	**J7MN-12-E8**	1	0.21
	1	0.25	0.7 – 1	13	100	**J7MN-12-1**	1	0.21
	1.25	0.37	0.9 – 1.25	16	100	**J7MN-12-1E25**	1	0.21
	1.6	0.55	1.1 – 1.6	21	100	**J7MN-12-1E6**	1	0.21
	2	0.75	1.4 – 2	26	100	**J7MN-12-2**	1	0.21
	2.5	-	1.8 – 2.5	33	100	**J7MN-12-2E5**	1	0.21
	3.2	1.1	2.2 – 3.2	42	100	**J7MN-12-3E2**	1	0.21
	4	1.5	2.8 – 4	52	100	**J7MN-12-4**	1	0.21
	5	-	3.5 – 5	65	100	**J7MN-12-5**	1	0.21
	6.3	2.2	4.5 – 6.3	82	100	**J7MN-12-6E3**	1	0.21
	8	3	5.5 – 8	104	50	**J7MN-12-8**	1	0.21
	10	4	7 – 10	130	50	**J7MN-12-10**	1	0.21
	12	5.5	9 – 12	156	50	**J7MN-12-12**	1	0.21

*1) Recommended values for standard motors

	Rated current In A	Suitable for motors*1 3~400V kW	Current setting range Thermal overload release A		Instantaneous short-circuit release A	Short-circuit breaking capacity at 3~400V kA	Type	Pack pcs.	Weight approx. kg/pcs.
Circuit-Breakers J7MN-25									
	0.16	-	0.11 –	0.16	2.1	100	**J7MN-25-E16**	1	0.32
	0.2	-	0.14 –	0.2	2.6	100	**J7MN-25-E2**	1	0.32
	0.25	0.06	0.18 –	0.25	3.3	100	**J7MN-25-E25**	1	0.32
	0.32	0.09	0.22 –	0.32	4.2	100	**J7MN-25-E32**	1	0.32
	0.4	-	0.28 –	0.4	5.2	100	**J7MN-25-E4**	1	0.32
	0.5	0.12	0.35 –	0.5	6.5	100	**J7MN-25-E5**	1	0.32
	0.63	0.18	0.45 –	0.63	8.2	100	**J7MN-25-E63**	1	0.32
	0.8	-	0.55 –	0.8	10	100	**J7MN-25-E8**	1	0.32
	1	0.25	0.7 –	1	13	100	**J7MN-25-1**	1	0.32
	1.25	0.37	0.9 –	1.25	16	100	**J7MN-25-1E25**	1	0.32
	1.6	0.55	1.1 –	1.6	21	100	**J7MN-25-1E6**	1	0.32
	2	0.75	1.4 –	2	26	100	**J7MN-25-2**	1	0.32
	2.5	-	1.8 –	2.5	33	100	**J7MN-25-2E5**	1	0.32
	3.2	1.1	2.2 –	3.2	42	100	**J7MN-25-3E2**	1	0.32
	4	1.5	2.8 –	4	52	100	**J7MN-25-4**	1	0.32
	5	-	3.5 –	5	65	100	**J7MN-25-5**	1	0.32
	6.3	2.2	4.5 –	6.3	82	100	**J7MN-25-6E3**	1	0.32
	8	3	5.5 –	8	104	100	**J7MN-25-8**	1	0.32
	10	4	7 –	10	130	100	**J7MN-25-10**	1	0.32
	12.5	5.5	9 –	12.5	163	100	**J7MN-25-12E5**	1	0.32
	16	7.5	11 –	16	208	50	**J7MN-25-16**	1	0.32
	20	-	14 –	20	260	50	**J7MN-25-20**	1	0.32
	22	-	17 –	22	286	50	**J7MN-25-22**	1	0.32
	25	11	20 –	25	325	50	**J7MN-25-25**	1	0.32
Circuit-Breakers J7MN-50									
	25	11	18 –	25	325	50	**J7MN-50-25**	1	0.96
	32	15	22 –	32	416	50	**J7MN-50-32**	1	0.96
	40	18.5	28 –	40	520	50	**J7MN-50-40**	1	0.96

*1) Recommended values for standard motors

Accessories

	Description	Version	for circuit breaker	Type	Pack pcs.	Weight approx. kg/pcs.
Transverse auxiliary contact block						
	Contact block	1NO + 1NC	all	**J73MN-11F**	10	0.02
Auxiliary contact block for left hand side mounting (max 1pc. per circuit breaker)						
	Contact block	1NO + 1NC 9 mm	all	**J73MN-11S**	10	0.03
Signalling switch for left hand side mounting (max 1pc. per circuit breaker)						
	Signalling switch	1NO + 1NC each Individual tripped and short-circuit signalling	J7MN-25 J7MN-50	**J73MN-T-11S**	1	0.07
Auxiliary releases for right hand side mounting (max 1pc. per circuit breaker)						
	Undervoltage release Trips the circuit-breaker when the voltage is interrupted. Prevents the motor from being restarted accidentally when the voltage is restored, suitable for EMERGENCY STOP acc. to VDE 0113	AC 50 Hz AC 60 Hz 230 V 240 V	all	**J74MN-U-N1**	1	0.12
	Shunt release Trips the circuit-breaker when the release coil energized.	50/60 Hz 50/60 Hz, DC 100% ON 5 sec ON 210-240 V 190-330 V	all	**J74MN-S-N2**	1	0.11

Enclosures and Front Plates

	Description	Version	for circuit breaker	Type	Pack pcs.	Weight approx. kg/pcs.
Front Plates						
	Moulded plastic front plate with actuator diaphragm and holder for circuit breaker	for actuation of circuit-breakers in any enclosure protection degree IP55	J7MN-12	**J74MN-P12**	1	0.08
	Moulded plastic front plate with rotary operating mechanism lockable	for actuation of circuit-breakers in any enclosure protection degree IP55	J7MN-25 J7MN-50	**J74MN-P25**	1	0.08
	Holder for front plate J74MN-P25	Holder is mounted on front plate, circuit-breaker (with accessories) is snapped on	J7MN-25	**J74MN-PH**	1	0.12
Enclosures						
	Moulded plastic enclose with actuator diaphragm knockouts for J7MN-25 sealable	protection degree IP55 with N- and PE- terminal (+ aux. contact + release)	J7MN-12	**J74MN-PF12**	1	0.27

	Description	Version	for circuit breaker	Type	Pack pcs.	Weight approx. kg/pcs.
	Moulded plastic enclose with rotary operating mechanism knockouts for J7MN-25 lockable	protection degree IP55 with N- and PE- terminal (+ aux. contact + release)	J7MN-25	**J74MN-PF25**	1	0.30
Door-coupling mechanisms						
	The door-coupling rotary operating mechanisms consist of a knob, a coupling driver and a extension shaft (5 mm x 5 mm). The door-coupling rotary operating mechanisms are designed for degree of protection IP 65. The door locking device prevents accidental opening of the cubicle door in the ON position of the circuit-breaker. The OFF position can be locked with up to 3 padlocks.					
	Door-coupling rotary mechanism black	extension shaft 330 mm with supporting bracket	J7MN-25 to J7MN-50	**J74MN-DC-B**	1	0.3
	Emergency-Stop Door-coupling rotary mechanism red/yellow	extension shaft 330 mm with supporting bracket	J7MN-25 to J7MN-50	**J74MN-DC-RY**	1	0.3

Busbars

	Description	Version	for circuit breaker	Type	Pack pcs.	Weight approx. kg/pcs.
Insulated 3-phase busbar systems						
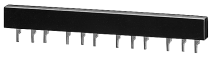	For feeding several modular circuit-breakers on standard mounting rails, insulated, shock-protected. Rated operational voltage max. 690 V					
	3-phase busbars modular spacing 45 mm	for 2 circuit-breakers for 3 circuit-breakers for 4 circuit-breakers for 5 circuit-breakers	J7MN-12 J7MN-25	**J74MN-L3-1/2** **J74MN-L3-1/3** **J74MN-L3-1/4** **J74MN-L3-1/5**	1 1 1 1	0.03 0.05 0.07 0.10
	For connecting the 3-phase busbars from circuit-breakers different sizes. Clamping together J7MN-12 and J7MN-25 circuit-breakers is not possible due to the different modular spacings and the different heights of the terminals.					
	Line side terminal 3-pole, connection from top	Conductor cross-section solid or stranded 6- 25 mm² with ferrule 4-16 mm²	J7MN-12 J7MN-25	**J74MN-TC12** **J74MN-TC25**	1 1	0.04 0.04
	Shroud	for unused terminals	J7MN-12 J7MN-25	**J74MN-DS**	20	-

Mounting Parts for Fuseless Load Feeders

	Description	Version	for circuit breaker	Type	Pack pcs.	Weight approx. kg/pcs.
DIN-rail adapters						
	Adapter for mechanical fixing of circuit-breaker and contactor	35 mm-DIN-rail (DIN EN50022) or screw mounting	J7MN-12 J7MN-25	**J74MN-HU**	10	0.05
Link modules						
	for mechanical fixing and electrical connection between circuit-breaker and contactor					
	Link module	up to 20 A up to 32 A	J7MN-12 J7MN-25	**J74KN-VD-12** **J74KN-VD-25**	10 10	- -
Terminal block						
	with increased creepage distances and clearances acc. to cULus Type „E“					
	Terminal block	up to 600 V acc. to UL 489 not for transverse aux. contact block	J7MN-25	**J74MN-TB25**	1	0.12

Specifications

■ Engineering data and Characteristics

Components for Fuseless Load Feeders, DIN-Rail Mounting

Type of coordination „1“ 3 x 415 V 10 kA (other conditions on request)

Motor 3~400V kW	Setting range A		Circuit-breaker page 66 Type	Contactor 220-230V 50Hz Type	**Link module Type**	**DIN-rail adapter Type**
-	0.11–	0.16	J7MN-25-E16	J7KN-10-10 230	**J74MN-12 VD**	**J74MN-HU**
-	0.14–	0.2	J7MN-25-E2	J7KN-10-10 230	**J74MN-12 VD**	**J74MN-HU**
0.06	0.18–	0.25	J7MN-25-E25	J7KN-10-10 230	**J74MN-12 VD**	**J74MN-HU**
0.09	0.22–	0.32	J7MN-25-E32	J7KN-10-10 230	**J74MN-12 VD**	**J74MN-HU**
-	0.28–	0.4	J7MN-25-E4	J7KN-10-10 230	**J74MN-12 VD**	**J74MN-HU**
0.12	0.35–	0.5	J7MN-25-E5	J7KN-10-10 230	**J74MN-12 VD**	**J74MN-HU**
0.18	0.45–	0.63	J7MN-25-E63	J7KN-10-10 230	**J74MN-12 VD**	**J74MN-HU**
-	0.55–	0.8	J7MN-25-E8	J7KN-10-10 230	**J74MN-12 VD**	**J74MN-HU**
0.25	0.7–	1	J7MN-25-1	J7KN-10-10 230	**J74MN-12 VD**	**J74MN-HU**
0.37	0.9–	1.25	J7MN-25-1E25	J7KN-10-10 230	**J74MN-12 VD**	**J74MN-HU**
0.55	1.1–	1.6	J7MN-25-1E6	J7KN-10-10 230	**J74MN-12 VD**	**J74MN-HU**
0.75	1.4–	2	J7MN-25-2	J7KN-10-10 230	**J74MN-12 VD**	**J74MN-HU**
-	1.8–	2.5	J7MN-25-2E5	J7KN-10-10 230	**J74MN-12 VD**	**J74MN-HU**
1.1	2.2–	3.2	J7MN-25-3E2	J7KN-10-10 230	**J74MN-12 VD**	**J74MN-HU**
1.5	2.8–	4	J7MN-25-4	J7KN-10-10 230	**J74MN-12 VD**	**J74MN-HU**
-	3.5–	5	J7MN-25-5	J7KN-10-10 230	**J74MN-12 VD**	**J74MN-HU**
2.2	4.5–	6.3	J7MN-25-6E3	J7KN-10-10 230	**J74MN-12 VD**	**J74MN-HU**
3	5.5–	8	J7MN-25-8	J7KN-10-10 230	**J74MN-12 VD**	**J74MN-HU**
4	7–	10	J7MN-25-10	J7KN-10-10 230	**J74MN-12 VD**	**J74MN-HU**
5.5	9–	12.5	J7MN-25-12E5	J7KN-14-10 230	**J74MN-12 VD**	**J74MN-HU**
7.5	11–	16	J7MN-25-16	J7KN-18-10 230	**J74MN-12 VD**	**J74MN-HU**
-	14–	20	J7MN-25-20	J7KN-22-10 230	**J74MN-25 VD**	**J74MN-HU**
-	17–	22	J7MN-25-22	J7KN-22-10 230	**J74MN-25 VD**	**J74MN-HU**
11	20–	25	J7MN-25-25	J7KN-22-10 230	**J74MN-25 VD**	**J74MN-HU**

Technical Data according to IEC/EN 60947-1, 60947-2, 60947-4-1 and VDE 0660

This table shows the rated ultimate short-circuit breaking capacity I_{cu} and the rated service short-circuit breaking capacity I_{cs} of the J7MN circuit-breakers with different operational voltages as a function of the rated current In of the circuit-breakers.

The circuit-breakers can be fed at the top or bottom supply terminals without any reduction of the rated data.

If the short-circuit current exceeds the rated short-circuit breaking capacity of the circuit-breaker specified in the tables at the installation point, a back-up fuse is to be used.

The maximum rated current for the back-up fuse is specified in the tables. These fuses are only suitable for the short-circuit-currents as indicated on the fuses.

Circuit-breaker	Rated current In	up to AC 240V*1			up to AC 400V*1 up to AC 415V*2			up to AC 440V*1 up to AC 460V*2			up to AC 500V*1 up to AC 525V*2			up to AC 690V*1		
Type	A	I_{cu} kA	I_{cs} kA	max. fuse (gL/gG) A	I_{cu} kA	I_{cs} kA	max. fuse (gL/gG) A	I_{cu} kA	I_{cs} kA	max. fuse (gL/gG) A	I_{cu} kA	I_{cs} kA	max. fuse (gL/gG) A	I_{cu} kA	I_{cs} kA	max. fuse (gL/gG) A
J7MN-12	0.16 to 0.8	100	100	--	100	100	--	100	100	--	100	100	--	100	100	--
	1	100	100	--	100	100	--	100	100	--	100	100	--	100	100	--
	1.25	100	100	--	100	100	--	100	100	--	100	100	--	2	2	20
	1.6	100	100	--	100	100	--	100	100	--	100	100	--	2	2	20
	2	100	100	--	100	100	--	100	100	--	10	10	35	2	2	35
	2.5	100	100	--	100	100	--	100	100	--	10	10	35	2	2	35
	3.2	100	100	--	100	100	--	10	10	40	3	3	40	2	2	40
	4	100	100	--	100	100	--	10	10	40	3	3	40	2	2	40
	5	100	100	--	100	100	--	10	10	50	3	3	50	2	2	50
	6.3	100	100	--	100	100	--	10	10	50	3	3	50	2	2	50
	8	100	100	--	50	12.5	80*3	10	10	63	3	3	63	2	2	63
	10	100	100	--	50	12.5	80*3	10	10	63	3	3	63	2	2	63
	12	100	100	--	50	12.5	80*3	10	10	80	3	3	80	2	2	80
J7MN-25	0.16 to 1.25	100	100	--	100	100	--	100	100	--	100	100	--	100	100	--
	1.6	100	100	--	100	100	--	100	100	--	100	100	--	100	100	--
	2	100	100	--	100	100	--	100	100	--	100	100	--	8	8	25
	2.5	100	100	--	100	100	--	100	100	--	100	100	--	8	8	25
	3.2	100	100	--	100	100	--	100	100	--	100	100	--	8	8	32
	4	100	100	--	100	100	--	100	100	--	100	100	--	6	3	32
	5	100	100	--	100	100	--	100	100	--	100	100	--	6	3	32
	6.3	100	100	--	100	100	--	100	100	--	100	100	--	6	3	50
	8	100	100	--	100	100	--	50	25	63*3	42	21	63	6	3	50
	10	100	100	--	100	100	--	50	25	80*3	42	21	63	6	3	50
	12.5	100	100	--	100	100	--	50	25	80*3	42	21	80	6	3	63
	16	100	100	--	50	25	100*3	20	10	80	10	5	80	4	2	63
	20	100	100	--	50	25	125*3	20	10	80	10	5	80	4	2	63
	22	100	100	--	50	25	125*3	20	10	100	10	5	80	4	2	63
	25	100	100	--	50	25	125*3	20	10	100	10	5	80	4	2	63
J7MN-50	25	100	100	--	50	25	125*3	30	15	100	12	6	80	5	3	63
	32	100	100	--	50	25	125*3	30	15	125	10	5	100	4	2	63
	40	100	100	--	50	25	160*3	30	15	125	10	5	100	4	2	63

*1) 10% overvoltage

*2) 5% overvoltage

*3) Back-up fuse required if short-circuit current at installation point > 50 kA

-- No back-up fuse required.

Technical Data according to IEC/EN 60947-1, 60947-2, 60947-4-1 and VDE 0660

Main Circuit

Type				J7MN-12	J7MN-25	J7MN-50
Number of poles				3	3	3
Max. rated current Inmax (=max. rated operational current Ie)			A	12	25	50
Permissible ambient temperature						
Storage/transport			°C	-50 to +80		
Operation			°C	-20 to +70[*1]		
Permissible rated current at temperature inside cubicle of:		+60 °C	%	100		
		+70 °C	%	87		
Circuit-breaker inside enclosure						
Permissible rated current at temperature inside enclosure of:		+60 °C	%	100		
		+70 °C	%	87		
Rated operational voltage Ue			V	690[*2]		
Rated frequency			Hz	50/60		
Rated insulation voltage Ui			V	690		
Rated impulse withstand voltage Uimp			kV	6		
Utilization category						
IEC 60 947-2 (circuit-breaker)				A		
IEC 60 947-4-1 (motor starter)				AC-3		
Class	acc. to IEC 60 947-4-1			10		
DC short-circuit breaking capacity (time constant t = 5 ms)						
1 conducting path DC 150 V			kA	10		
2 conducting paths in series DC 300 V			kA	10		
3 conducting paths in series DC 450 V			kA	10		
Power loss Pv per circuit-breaker dependent on rated current In (upper setting range)	In -> to 1.25 A		W	5	-	-
	In -> 1.6 to 6.3 A		W	6	-	-
	In -> 8 to 12 A		W	7	-	-
R per conducting path = P/(I² × 3)	In -> 1 to 6.3 A		W	-	6	-
	In -> 8 to 16 A		W	-	7	-
	In -> 20 to 25 A		W	-	8	-
	In -> to 25 A		W	-	-	12
	In -> 32 A		W	-	-	15
	In -> 40 to 50 A		W	-	-	20
Shock resistance	acc. to IEC 68 Part 2-27		g	25	25	25
Degree of protection	acc. to IEC 60 529			IP 20	IP 20	IP 20[*3]
Shock hazard protection	acc. to DIN VDE 0106 Part 100			safe against finger touch		
Temperature compensation	acc. to IEC 60 947-4-1		°C	-20 to +60		
Phase failure sensitivity	acc. to IEC 60 947-4-1			yes		
Explosion protection	acc. to EC Directive 94191 EC			yes[*4]		
Isolator characteristics	acc. to IEC 60 947-3			yes		
Main and EM. STOP switch characteristics	acc. to IEC 60 204-1 (VDE 0113)			yes[*5]		
Safe isolation between main and auxiliary circuits	acc. to DIN VDE 0106 Part 101					
	up to 400 V + 10 %			yes		
	up to 415 V+ 5 %			yes		
Mechanical endurance	operating cycles			100 000	100 000	50 000
Electrical endurance				100 000	100 000	25 000
Max. operating frequency per hour (motor starts)			1/h	15	15	15
Permissible mounting position				any. acc. to IEC 60 447 start command "I" right-hand side or top		

*1) Over +60°C current reduction
*2) 500 V with moulded-plastic enclosure
*3) Terminal compartment IP00
*4) KEMA-test certification on request
*5) With appropriate accessories

Technical Data according to IEC/EN 60947-1, 60947-2, 60947-4-1 and VDE 0660

Conductor cross-sections for main Circuit

Type		J7MN-12	J7MN-25	J7MN-50
Terminal type		Screw-type	Screw-type	Box terminal
Terminal screw		Pozidriv size 2	Pozidriv size 2	Pozidriv size 2
Tightening torque	Nm	0.8 to 1.2	2 to 2.5	3 to 4.5
Conductor cross-sections				
solid	mm^2	2 x (0.5 to 1.5)	2 x (1 to 2.5)	2 x (0.75 to 16)
	mm^2	2 x (0.75 to 2.5)	2 x (2.5 to 6)	–
	mm^2	1 x (0.5 to 4)		
finely stranded with end ferrule	mm^2	2 x (0.5 to 1.5)	2 x (1 to 2.5)	2 x (0.75 to 16)
	mm^2	2 x (0.75 to 2.5)	2 x (2.5 to 6)	1 x (0.75 to 25)
	mm^2		1 x (1 to 10)	
stranded	mm^2	2 x (0.5 to 1.5)	2 x (1 to 2.5)	2 x (0.75 to 25)
	mm^2	2 x (0.75 to 2.5)	2 x (2.5 to 6)	1 x (0.75 to 35)
	mm^2	1 x (0.5 to 4)	1 x (1 to 10)	
AWG-wires, solid or stranded	AWG	2 x (18 to 14)	2 x (14 to 10)	2 x (18 to 3)
	AWG	–	–	1 x (18 to 2)
conductor bar (number x width x thick)	mm	–	–	2 x (6 x 9 x 0.8)

Technical Data according to IEC/EN 60947-1, 60947-2, 60947-4-1 and VDE 0660

Auxiliary switches

Switching capacity				Control voltage			
Front transverse auxiliary switch with 1 NO + 1 NC							
Rated operational voltage Ue		AC	V	24	230		
Rated operational current Ie/AC-15			A	2	0.5		
Rated operational current Ie/AC-12 Ith			A	2.5	2.5		
Rated operational voltage Ue		DC L/R 200 ms	V	24	48	60	
Rated operational current Ie/DC-13			A	1	0.3	0.15	
Lateral auxiliary switch and signalling switch							
Rated operational voltage Ue		AC	V	24	230	400	690
Rated operational current Ie/AC-15			A	6	6	3	1
Rated operational current Ie/AC-12 Ith			A	10	10	10	10
Rated operational voltage Ue		DC L/R 200 ms	V	24	110	220	440
Rated operational current Ie/DC-13			A	2	0.5	0.25	0.1
Undervoltage release	Power consumption	during pick-up	VA/W	20.2/13			
		uninterrupted duty	VA/W	7.2/2.4			
	Response voltage	trip	V	0.7 to 0.35 × Us			
		pick-up	V	0.85 to 1.1 × Us			
	Max. opening time		ms	20			
Shunt release	Power consumption during pick-up		AC VA/W	20.2/13			
			DC W	13 to 80			
	Response voltage acc. to IEC 60 947-1, trip		V	0.7 to 1.1 × Us			
	Max. opening time		ms	20			
Short-circuit protection for auxiliary and control circuits							
	Fuse	gL/gG	A	10			
	Miniature circuit breaker C-characteristic		A	6*1			
Conductor cross-sections for auxiliary and control circuits				Screw-type Pozidriv size 2			
	solid		mm^2	2 x (0.5 to 1.5) / 2 x (0.75 to 2.5)			
	finely stranded with ferrule		mm^2	2 x (0.5 to 1.5) / 2 x (0.75 to 2.5)			
	stranded		mm^2	2 x (0.5 to 1.5) / 2 x (0.75 to 2.5)			
	AWG-wires, solid or stranded		AWG	2 x (18 to 14)			

*1) Prospective short-circuit current < 0.4 kA.

Description

J7MN circuit-breakers are compact, current-limiting circuit-breakers which are optimised for load feeders. The circuit-breakers are used for switching and protecting three-phase induction motors of up to 18,5 kW at AC 400 V and for loads with rated currents of up to 40 A.

Construction

The circuit-breakers are available in three sizes:

J7MN-12 overall width 45 mm. Max. rated current 12 A. Suitable for 3-phase induction motors of up to 5.5 kW at voltages of 400 V AC.

J7MN-25 overall width 45 mm. Max. rated current 25 A. Suitable for 3-phase induction motors of up to 11 kW at voltages of 400 V AC.

J7MN-50 overall width 55 mm. Max. rated current 40 A. Suitable for 3-phase induction motors of up to 18,5 kW at voltages of 400 V AC.

Releases

Circuit-breakers J7MN are equipped with bimetallic-based, inverse-time delayed overload releases and with instantaneous overcurrent releases (electromagnetic short-circuit releases).

The overload releases can be set in accordance with the load current. The overcurrent releases are permanently set to a value 13 times the rated current and thus enable trouble-free start-up of motors.

The scale cover can be sealed to prevent unauthorized adjustments to the set current.

Operating mechanisms

circuit-breakers J7MN-12 are actuated via a switch operating mechanism and circuit-breakers J7MN-25 and J7MN-50 via a rotary operating mechanism. If the circuit-breaker trips, the rotary operating mechanism switches to the tripped position to indicate this. Before the circuit-breaker is reclosed, the rotary operating mechanism must be reset to the 0 position by hand, in order to prevent the former from closing by mistake before the fault has been cleared.

In the case of circuit-breakers with rotary operating mechanisms, there is an electrical signal via a signalling switch to indicate that the circuit-breaker has tripped.

All operating mechanisms can be locked in the 0 position with a padlock (shackle diameter 3.5 to 4.5 mm).

The J7MN circuit-breakers fulfil the isolation characteristics specified in IEC 60 947-2.

Operating conditions

Circuit-breakers J7MN are suitable for use in any climate. They are designed for operation in enclosed rooms under normal conditions (e. g. no dust, corrosive vapours or harmful gases). Suitable enclosures must be provided for installation in dusty or damp rooms.

Circuit-breakers J7MN can also be fed from below. The standards in accordance with which the circuit-breakers are constructed, the permissible ambient temperatures, the maximum making and breaking capacities, the tripping currents and other boundary conditions can be found in the technical data and tripping characteristics.

Since the operational currents, starting currents and current peaks vary as a result of the inrush current, even in the case of motors with identical output ratings, the values specified for these output ratings in the selection tables are intended as a guide only. The specific rated and start-up data of the motor to be protected is always paramount to the choice of the most suitable circuit-breaker.

In order to prevent premature tripping due to phase failure sensitivity, the circuit-breakers should always be connected in such a way that current flows through all three main conducting paths.

Short-circuit protection

The short-circuit releases of J7MN circuit-breakers disconnect the faulty load feeder from the system in the event of a short circuit and thus prevent any further damage.

Circuit-breakers with a short-circuit breaking capacity of 50 kA or 100 kA at a voltage of 400 V AC are practically short-circuit-proof at this voltage, as higher short-circuit currents are not usually encountered at the installation point.

Back-up fuses are only necessary if the short-circuit current at the installation point exceeds the rated ultimate short-circuit breaking capacity of the circuit-breakers.

Motor protection

The tripping characteristics of J7MN circuit-breakers are designed mainly to protect three-phase induction motors. The circuit-breakers are therefore also referred to as motor circuit-breakers. The current of the motor to be protected is set with the aid of the scale.

Circuit-breakers with thermal overload releases are normally designed in accordance with release Class 10.

Line protection

J7MN circuit-breakers for motor protection are also suitable for line protection. In order to prevent premature tripping due to phase failure sensitivity, the three conducting paths must always be uniformly loaded. The conducting paths must be connected in series in the case of single-phase loads.

The J7MN circuit-breakers meet the isolation conditions of IEC 60 947-3 as well as the additional test conditions for circuit-breakers with isolation characteristics specified in IEC 60 947-2. Taking IEC 60 204-1 into consideration, they can thus be implemented as main and EMERGENCY STOP switches.

Door-coupling rotary operating mechanism do not fulfil the isolation characteristics specified in IEC 60 947-2. Door-coupling rotary operating mechanism according isolation characteristics specified in IEC 60 947-2 on request.

Characteristics

The time/ current characteristic, the current limiting characteristics and the I²t characteristics were determined in accordance with DIN VDE 0660 and IEC 60 947.

The tripping characteristic of the inverse-time delayed overload releases (thermal overload releases or 'a' releases) for DC and AC with a frequency of 0 to 400 Hz also apply to the time/current characteristic.

The characteristics apply to the cold state. At operating temperature, the tripping times of the thermal releases are reduced to approximately 25 %.

Under normal operating conditions, all three poles of the device must be loaded. The three main conducting paths must be connected in series in order to protect single-phase or DC loads.

With 3-pole loading, the maximum deviation in the tripping time for 3 times the setting current and upwards is ± 20 % and thus in accordance with DIN VDE 0165.

The tripping characteristics for the instantaneous, electromagnetic overcurrent releases (short-circuit releases or 'n' releases) are based on the rated current I_n, which is also the maximum value of the setting range for circuit-breakers with adjustable overload releases. If the current is set to a lower value, the tripping current of the 'n' release is increased by a corresponding factor.

The characteristics of the electromagnetic overcurrent releases apply to frequencies of 50/60 Hz. Appropriate correction factors must be used for lower frequencies up to 16 2/3 Hz, for higher frequencies up to 400 Hz and for DC.

The characteristic shown here is a schematic representation of circuit-breakers for all ranges.

Time/current characteristics, current limiting characteristics and I²t characteristics are available on request.

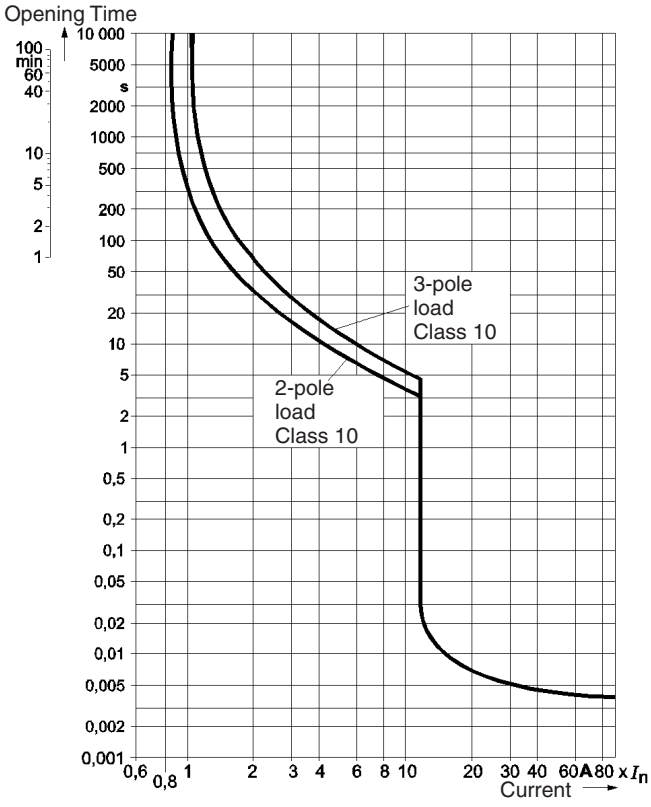

■ Wiring diagrams

Circuit-breaker **J7MN** 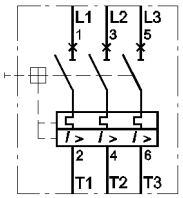	Transverse auxiliary contact block **J73MN-11F** 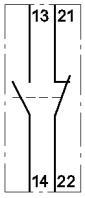	Lateral auxiliary contact block **J73MN-11S** 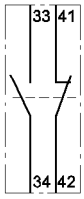
Signalling switch **J73MN-T-11S** 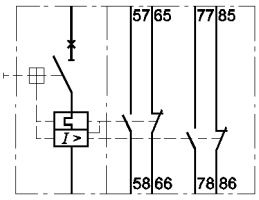	Undervoltage release **J74MN-U** 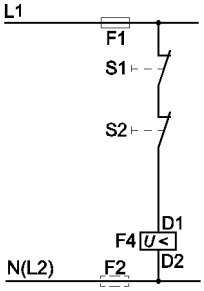	Shunt release **J74MN-S** 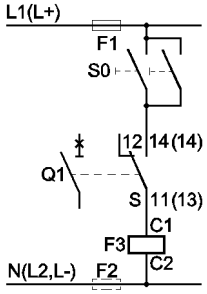

■ Dimensions

Circuit-breaker **J7MN-12**

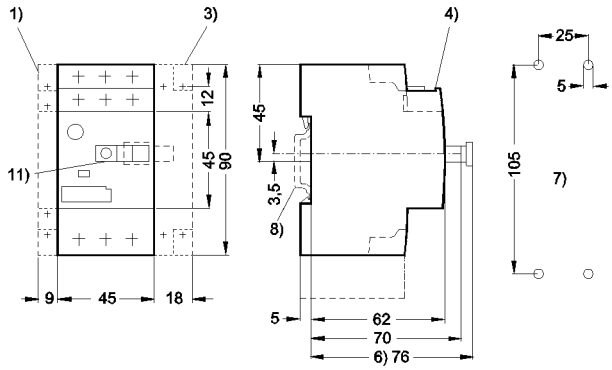

Circuit-breaker **J7MN-25**

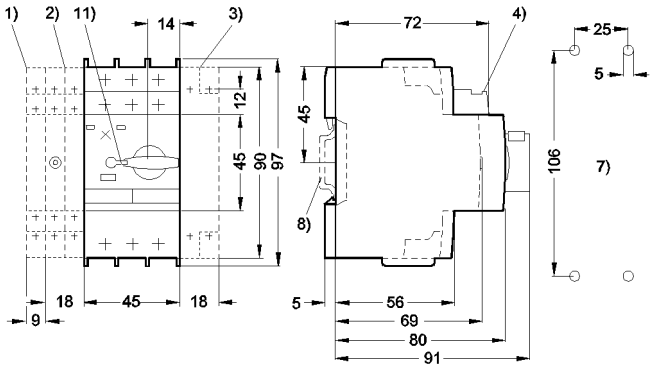

Circuit-breaker **J7MN-50**

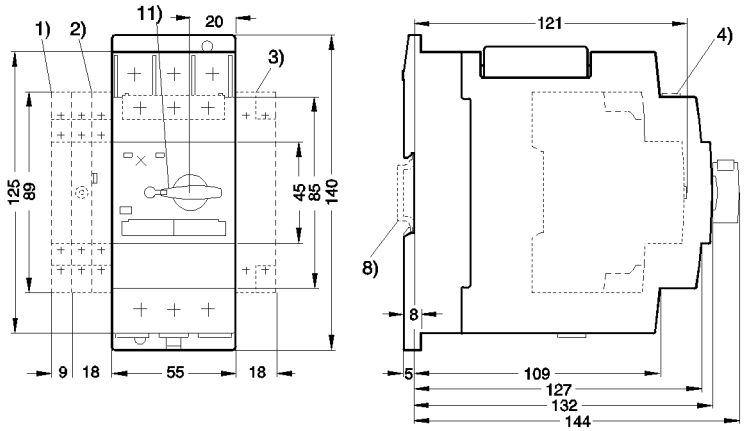

1) Lateral aux. contact
2) Signalling contact
3) Auxiliary release
4) Transverse aux. contact
7) Mounting holes
8) 35mm DIN-rail
9) 35mm DIN-rail 15mm high or 75mm DIN-rail
10) 4mm hexagon socket screw
11) Lockable in 0-position with shackle diameter max.5mm

Moulded plastic front plate **J74MN-P12**

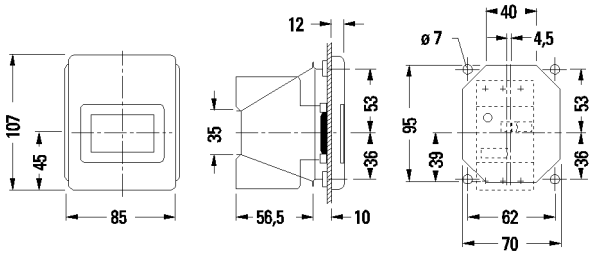

Moulded plastic front plate **J74MN-P25**

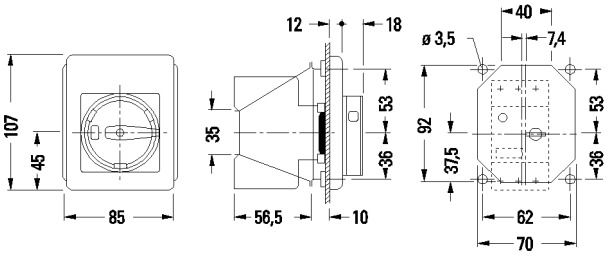

Moulded plastic enclosure **J74MN-PF12**

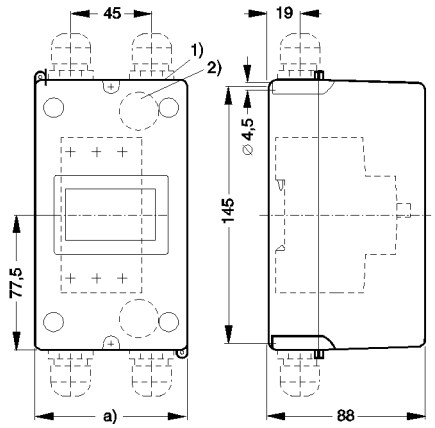

Door-coupling rotary operating mechanism **J74MN-DC**

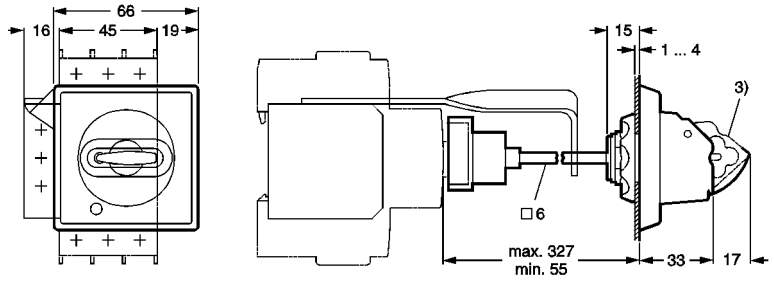

1) Max. for shackle diameter for padlock 8 mm

3-phase busbar **J74MN-L3-□/□**
for J7MN-12 and J7MN-25, modular spacing 45 mm

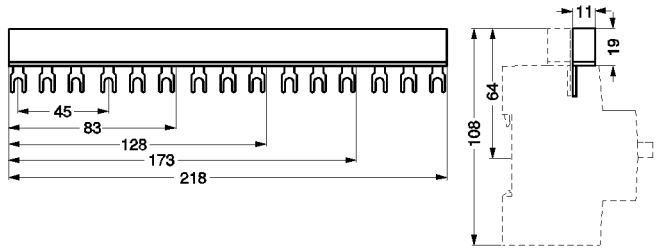

3-phase line-side terminal **J74MN-TC12** and **J74MN-TC25**

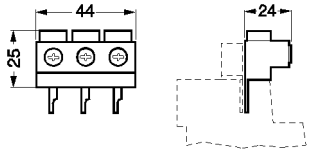

ALL DIMENSIONS SHOWN ARE IN MILLIMETERS.
To convert millimeters into inches, multiply by 0.03937. To convert grams into ounces, multiply by 0.03527.

Cat. No. J508-E2-01

In the interest of product improvement, specifications are subject to change without notice.