Chipsmall Limited consists of a professional team with an average of over 10 year of expertise in the distribution of electronic components. Based in Hongkong, we have already established firm and mutual-benefit business relationships with customers from,Europe,America and south Asia,supplying obsolete and hard-to-find components to meet their specific needs.

With the principle of “Quality Parts,Customers Priority,Honest Operation,and Considerate Service”,our business mainly focus on the distribution of electronic components. Line cards we deal with include Microchip,ALPS,ROHM,Xilinx,Pulse,ON,Everlight and Freescale. Main products comprise IC,Modules,Potentiometer,IC Socket,Relay,Connector.Our parts cover such applications as commercial,industrial, and automotives areas.

We are looking forward to setting up business relationship with you and hope to provide you with the best service and solution. Let us make a better world for our industry!

Contact us

Tel: +86-755-8981 8866 Fax: +86-755-8427 6832
Email & Skype: info@chipsmall.com Web: www.chipsmall.com
Address: A1208, Overseas Decoration Building, #122 Zhenhua RD., Futian, Shenzhen, China

図面番号(DRAWING NO.) SJ105916

版数 REV.	年月日 DATE	DCN NO.	変更内容 DESCRIPTION	製図 DR.	担当 CHK.	査閲 APPD.	承認 APPD.
2	4.Jan.2007	061961	REVISED TITLE etc.	———	N.SASANO	E.MATSUMOTO	A.ONOGAWA
3	26.Dec.2007	064718	CORRECT AN ERROR	———	T.TAKESHITA	—	E.Matsumoto

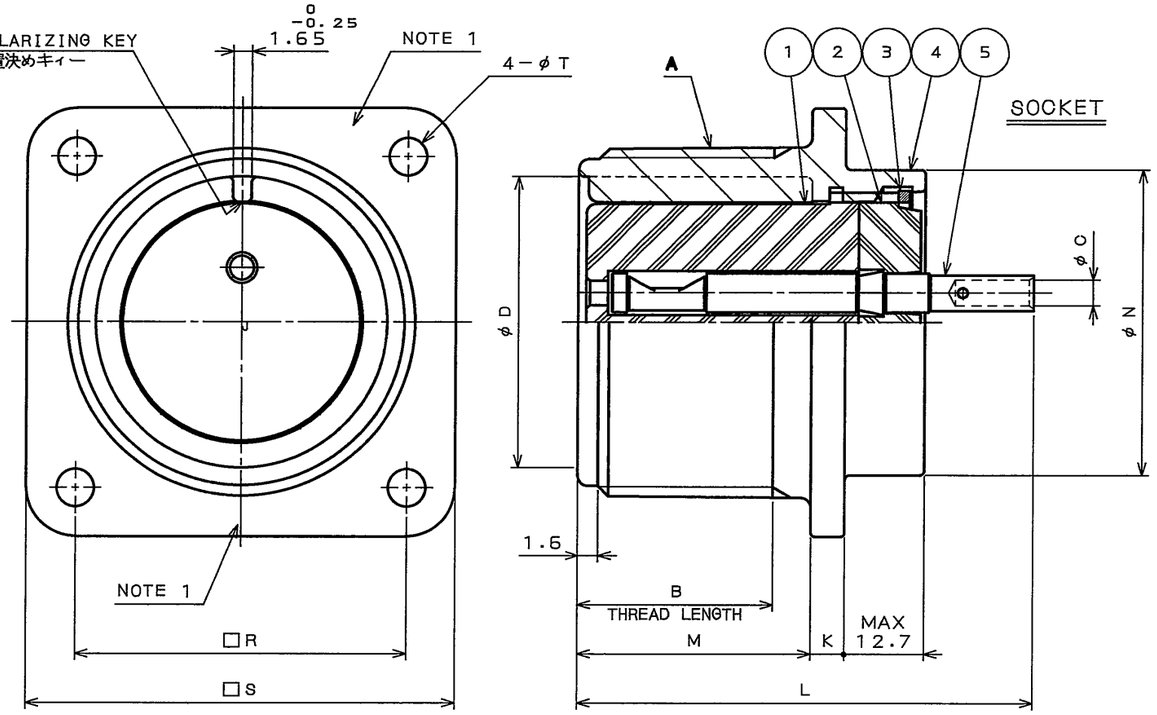

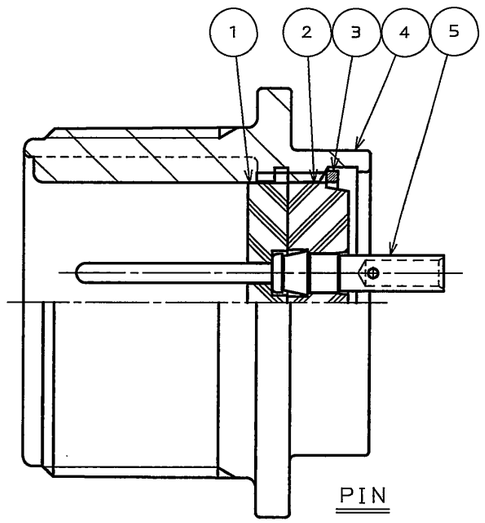

DESIGNATION
命名法

JA 3102A−＊−※※※C＊−R

- SERIES シリーズ
- SHELL TYPE シェルタイプ
- CLASS クラス
- SHELL SIZE シェルサイズ
- INSERT ARRANGEMENT インサート配列
- ALTERNATE POSITION インサート交換位置文字
- SUFFIX 特殊記号

SIZE	SCREW A	B^{MIN}	$\phi D^{+0.4}_{0}$	$K^{\pm0.8}$	L^{MAX}	$M^{+0.8}_{0}$	$N^{0}_{-0.5}$	$R^{\pm0.13}$	$S^{\pm0.8}$	$\phi T^{+0.25}_{-0.13}$
8S	1/2 −28UNEF−2A	9.5	9.40	2.2	30.2	14.3	11.4	15.09	22.2	3.05
10S	5/8 −24UNEF−2A	↑	11.38	↑	31.8	↑	12.9	18.26	25.4	↑
10SL	5/8 −24UNEF−2A	↕	11.38	↕	31.8	↕	15.9	18.26	25.4	↕
12S	3/4 −20UNEF−2A	↓	14.15	↕	31.8	↕	15.9	20.62	27.8	↕
14S	7/8 −20UNEF−2A	9.5	17.32	↕	33.3	↓	19.0	23.01	30.2	↕
16S	1 −20UNEF−2A	15.9	20.50	↕	34.9	14.3	22.2	24.61	32.5	↕
12	3/4 −20UNEF−2A	↑	14.15	↕	38.1	19.1	15.9	20.62	27.8	↕
14	7/8 −20UNEF−2A	↕	17.32	↓	38.1	↑	19.0	23.01	30.2	↕
16	1 −20UNEF−2A	↕	20.50	2.2	44.5	↕	22.2	24.61	32.5	↕
18	1/8−18UNEF−2A	↕	23.67	2.7	↕	↕	24.9	26.97	34.9	↕
20	1 1/4−18UNEF−2A	↕	26.87	↑	↓	↓	29.7	29.36	38.1	↓
22	1 3/8−18UNEF−2A	↕	30.02	↕	44.5	19.1	32.1	31.75	41.3	3.05
24	1 1/2−18UNEF−2A	↕	33.20	↓	47.6	20.6	35.3	34.92	44.5	3.73
28	1 3/4−18UNS−2A	↕	38.76	2.7	47.6	20.6	41.7	39.67	50.8	3.73
32	2 −18UNS−2A	↕	45.11	4.0	50.8	22.2	47.9	44.45	57.2	4.39
36	2 1/4−16UN−2A	↕	50.67	↑	↑	↑	54.3	49.23	63.5	↑
40	2 1/2−16UN−2A	↕	57.02	↕	↕	↕	59.9	55.58	69.9	↕
44	2 3/4−16UN−2A	↓	63.37	↓	↓	↓	67.1	60.32	76.2	↓
48	3 −16UN−2A	15.9	69.72	4.0	50.8	22.2	73.4	66.68	82.6	4.39

DIMENSIONS AND CABLE SIZE ON STANDARD CONTACT
標準品コンタクトの寸法及びケーブルサイズ

CONTACT SIZE コンタクトサイズ	φC	APPLICABLE WIRE 使用ケーブルサイズ
#16	2.1	1.25㎟〜2㎟
#12	2.8	2㎟〜3.5㎟
# 8	3.5	3.5㎟〜5.5㎟

符号 NO.	名称 DESCRIPTION	個数 QTY.	材料 MATERIAL	仕上 FINISH	備考 REMARKS
5	#16 PIN CONTACT ASSEMBLY	—	COPPER ALLOY	SILVER PLATING	SEE INSERT ARRANGEMENT CLIP MATERIAL:SYNTHETIC RESIN
4	SHELL	1	ALUMINUM ALLOY	ZINC PLATING	COLOR:BLACK SYSTEM INTERFERENCE COLOR
3	RETAINING RING	1	COPPER ALLOY	ZINC PLATING	COLOR:BLACK SYSTEM INTERFERENCE COLOR (NOTE 2)
2	INSULATOR	1	SYNTHETIC RESIN	———	
1	INSULATOR	1	SYNTHETIC RESIN	———	

NOTE1. CAMPANY LOGO "JAE" & PART NUMBER AS INDICATED.
"−R" IS NOT MARKED.
2. FOR THE CONNECTOR WITH THE INSERT OF "48−J50C", THE HOUSING MATERIAL SHALL BE THE SYNTHETIC RESIN.
注1. 図示の位置に社名及び品名を表示する。
但し、品名末尾の"−R"は表示しない。
2. "48−J50※C"インサートの場合は、リングの材質は合成樹脂である。

仕様書(SPECIFICATION) JACS−1027
第1版(ORIGINAL DATE) 16.Dec.2005
製図 DR. H.SAKURADA
担当 CHK. M.NITTA
査閲 APPD. E.MATSUMOTO
承認 APPD. A.ONOGAWA
一般公差(GENERAL TOLERANCE)
寸法(DIMENSION): . ± / .X ± / .XX ±0.4 / .XXX ±
角度(ANGLES): X° ± / X°X' ±
尺度(SCALE) ——— シリーズ(SERIES) JA
名称(TITLE) JA3102A−＊ −※※※C＊−R
質量(MASS)
日本航空電子工業株式会社 JAPAN AVIATION ELECTRONICS INDUSTRY, LTD.
図面番号(DRAWING NO.) SJ105916
SIZE A3 版数(REV.) 3

JAE-CONNECTOR.COM Reference only

JAE CONNECTOR DIV. PROPRIETARY.
COPYRIGHT(C) 2005, JAPAN AVIATION ELECTRONICS INDUSTRY, LTD.

DOF-0-212F(05.08)