Chipsmall Limited consists of a professional team with an average of over 10 year of expertise in the distribution of electronic components. Based in Hongkong, we have already established firm and mutual-benefit business relationships with customers from,Europe,America and south Asia,supplying obsolete and hard-to-find components to meet their specific needs.

With the principle of “Quality Parts,Customers Priority,Honest Operation,and Considerate Service”,our business mainly focus on the distribution of electronic components. Line cards we deal with include Microchip,ALPS,ROHM,Xilinx,Pulse,ON,Everlight and Freescale. Main products comprise IC,Modules,Potentiometer,IC Socket,Relay,Connector.Our parts cover such applications as commercial,industrial, and automotives areas.

We are looking forward to setting up business relationship with you and hope to provide you with the best service and solution. Let us make a better world for our industry!

Contact us

Tel: +86-755-8981 8866 Fax: +86-755-8427 6832
Email & Skype: info@chipsmall.com Web: www.chipsmall.com
Address: A1208, Overseas Decoration Building, #122 Zhenhua RD., Futian, Shenzhen, China

版数 REV.	年月日 DATE	DCN NO.	変更内容 DESCRIPTION	製図 DR.	担当 CHK.	査閲 APPD.	承認 APPD.

図面番号(DRAWING NO.) SJ100952

SECT. A-A
(SCALE 10:1)
(TERMINAL FORM)

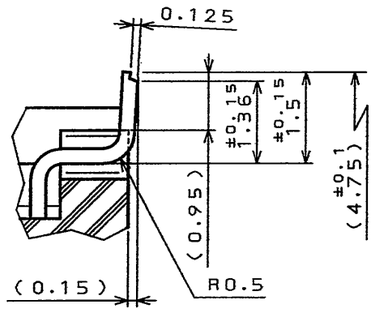

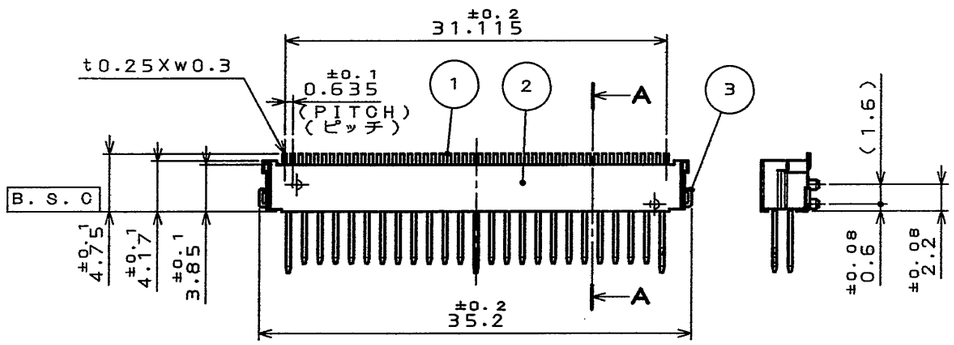

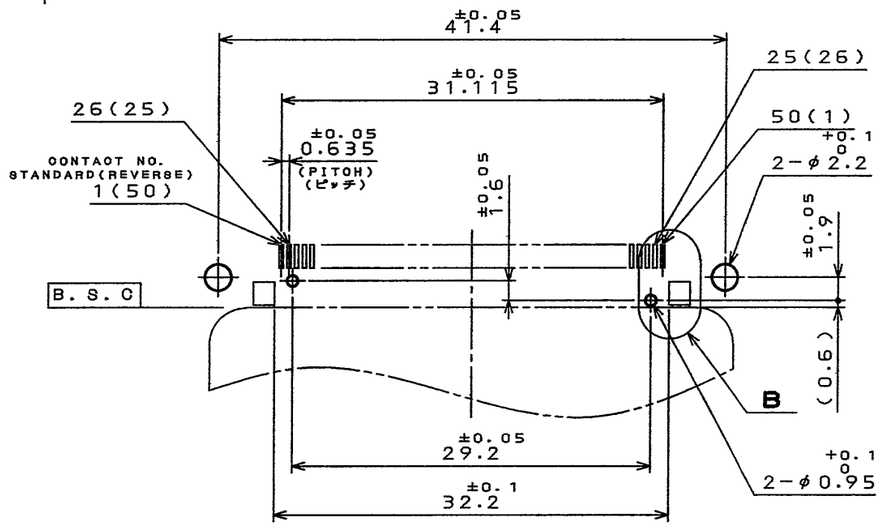

APPLICABLE P.C.B. DIMENSION(REF.)
適合基板寸法(参考)

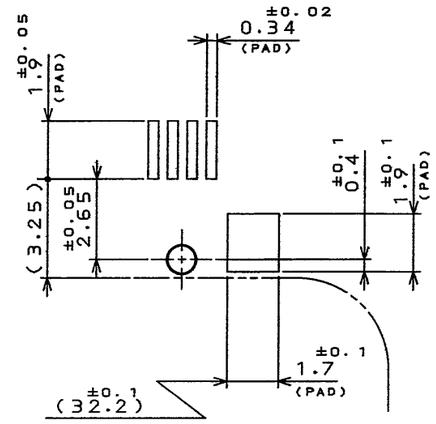

DETAIL B
(SCALE 5:1)

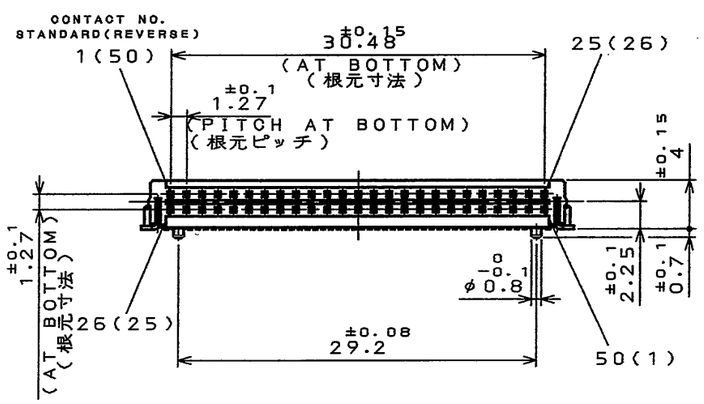

NOTE
1. THIS PRODUCTS ARE DESIGNED IN ACCORDANCE WITH COMPACT FLASH ASSOCIATION.
2. COPLANALITY OF SMT TERMINAL IS 0.1 MAX. (INCLUDE HOLD DOWN)
3. PLEASE REFER TO TABLE 1 FOR TERMINAL LENGTH.
4. THIS CONNECTOR MATES WITH JC26-F*****.

1. 本品は、コンパクトフラッシュ アソシエーションに準拠する。
2. 端子のバラツキ0.1以下。(ホールドダウンを含む)
3. 端子長寸法は、表1を参照願います。
4. 本品は、JC26-F*****と組み合わせて使用する。

TABLE 1

CONTACT NUMBER 端子番号	TERMINAL LENGTH 端子長
1, 13, 38, 50	$5^{\pm 0.1}$
25, 26	$3.5^{\pm 0.1}$
OTHERS 他	$4.25^{\pm 0.1}$

DESIGNATION
命名法

JC26-BB**E

- SERIES シリーズ
- BASE ベース
- POSITIONING BOSS TYPE 位置決めボス有無
  - B:WITH POSITIONING BOSS
  - N:WITHOUT POSITIONING BOSS
  - B:ボス有
  - N:ボス無
- CODE OF STAND OFF スタンドオフコード
  - NONE:0mm
  - 無印:0mm
- LEAD FREE(TIN/TIN ALLOY) 錫または錫合金(無鉛)

符号 NO.	名称 DESCRIPTION	個数 QTY.	材料 MATERIAL	仕上 FINISH	備考 REMARKS
3	HOLD DOWN	2	PHOSPHOR BRONZE	(LEAD FREE)TIN/TIN ALLOY OVER NICKEL	
2	INSULATOR	1	GLASS FILLED LCP		COLOR:IVORY UL94 V-0
1	CONTACT	50	COPPER ALLOY	CONTACT AREA:GOLD(0.1μm MIN.)OVER NICKEL TERMINAL AREA:(LEAD FREE)TIN/TIN ALLOY OVER NICKEL	

仕様書(SPECIFICATION) JACS-1504

第1版(ORIGINAL DATE) 25.Mar.2004

製図 DR. M.ABE
担当 CHK. T.WADA
査閲 APPD. M.Sasaki
承認 APPD. A.Kimura

一般公差(GENERAL TOLERANCE)

寸法(DIMENSION)	角度(ANGLES)
. ±0.8	X° ±
.X ±0.4	X°X' ±
.XX ±0.1	
.XXX ±	

尺度(SCALE) 2:1
シリーズ(SERIES) JC26
名称(TITLE) JC26-B*E
重量(WEIGHT)

日本航空電子工業株式会社
JAPAN AVIATION ELECTRONICS INDUSTRY, LTD.

図面番号(DRAWING NO.) SJ100952
版数(REV.) 1
SIZE A3

JAE-CONNECTOR.COM
Reference Only

LEAD FREE この製品は鉛フリー品です

JAE CONNECTOR DIV. PROPRIETARY.
COPYRIGHT (C) 2004. JAPAN AVIATION ELECTRONICS INDUSTRY, LTD.

DOF-0-212E(03.08)