Chipsmall Limited consists of a professional team with an average of over 10 year of expertise in the distribution of electronic components. Based in Hongkong, we have already established firm and mutual-benefit business relationships with customers from,Europe,America and south Asia,supplying obsolete and hard-to-find components to meet their specific needs.

With the principle of “Quality Parts,Customers Priority,Honest Operation,and Considerate Service”,our business mainly focus on the distribution of electronic components. Line cards we deal with include Microchip,ALPS,ROHM,Xilinx,Pulse,ON,Everlight and Freescale. Main products comprise IC,Modules,Potentiometer,IC Socket,Relay,Connector.Our parts cover such applications as commercial,industrial, and automotives areas.

We are looking forward to setting up business relationship with you and hope to provide you with the best service and solution. Let us make a better world for our industry!

Contact us

Tel: +86-755-8981 8866 Fax: +86-755-8427 6832
Email & Skype: info@chipsmall.com Web: www.chipsmall.com
Address: A1208, Overseas Decoration Building, #122 Zhenhua RD., Futian, Shenzhen, China

版数 REV.	年月日 DATE	DCN NO.	変更内容 DESCRIPTION	製図 DR.	担当 CHK.	査閲 APPD.	承認 APPD.

図面番号(DRAWING NO.) SJ100967

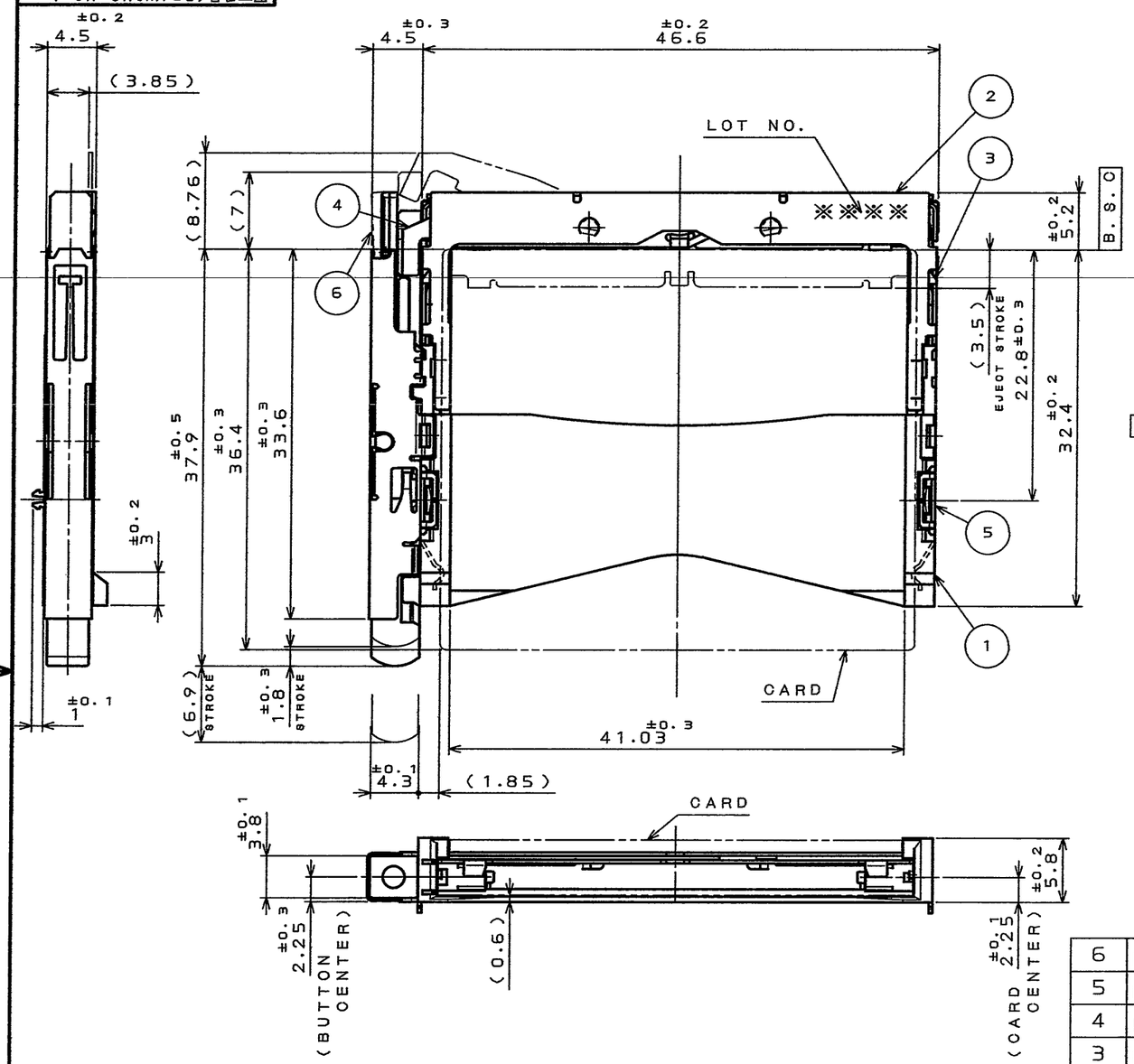

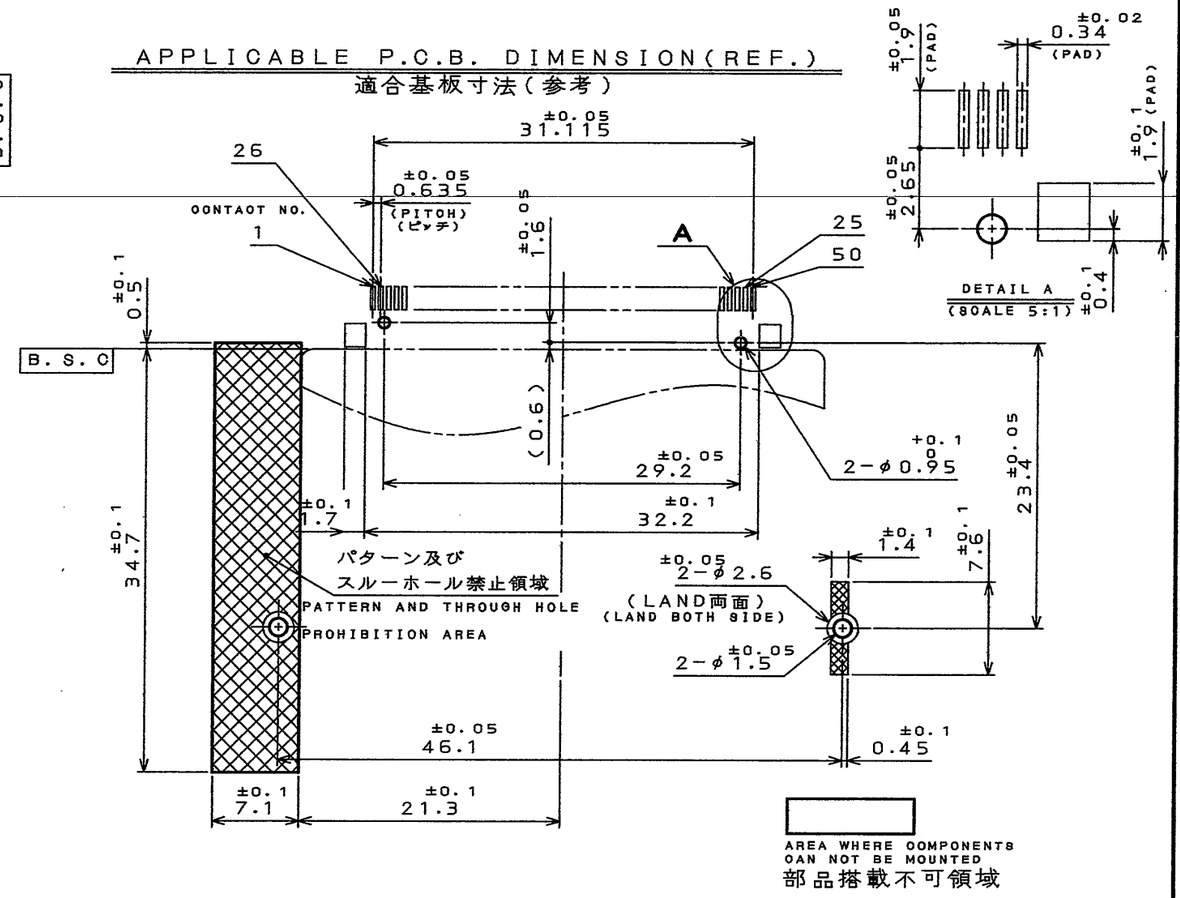

NOTE 1. THIS PRODUCTS ARE DESIGNED IN ACCORDANCE WITH COMPACT FLASH ASSOCIATION.

2. PLEASE REFER TO JAHL-1504-19 FOR USING THIS PRODUCT.

1. 本品は、コンパクトフラッシュ アソシエーションに準拠する。

2. 本品を御使用時は、取扱説明書(JAHL-1504-19)を御参照下さい。

JC26C2-DSL※E

- SERIES
- B:BASE / F:FRAME / D:DOUBLE PUSH TYPE FRAME
- KEY S:STANDARD / R:REVERSE
- BUTTON R:RIGHT / L:LEFT
- STAND OFF NONE:0mm / 15:1.6mm
- (LEAD FREE)TIN/TIN ALLOY

符号 NO.	名称 DESCRIPTION	個数 QTY.	材料 MATERIAL	仕上 FINISH	備考 REMARKS
6	EJECT UNIT	1			
5	EARTH LUG	2	COPPER ALLOY	SELECTIVE (LEAD FREE)TIN/TIN ALLOY OVER NICKEL	
4	LEVER	1	STAINLESS STEEL		
3	PLATE	1	STAINLESS STEEL		
2	COVER	1	STAINLESS STEEL		
1	FRAME	1	GLASS FILLED PBT		COLOR:BLACK UL94 V-0

仕様書(SPECIFICATION): JACS-1504-19, JAHL-1504-19

第1版(ORIGINAL DATE): 25.Mar.2004

一般公差(GENERAL TOLERANCE)

寸法(DIMENSION)	角度(ANGLES)
. ±0.8	X° ±
.X ±0.4	X°X' ±
.XX ±0.1	
.XXX ±	

製図 DR.	M.ABE
担当 CHK.	T.WADA
査閲 APPD.	M. Sasaki
承認 APPD.	A. Kimura

尺度(SCALE) 2:1 シリーズ(SERIES) JC26C2

名称(TITLE) JC26C2-DSLE

重量(WEIGHT)

日本航空電子工業株式会社 JAPAN AVIATION ELECTRONICS INDUSTRY, LTD.

図面番号(DRAWING NO.) SJ100967 版数(REV.) 1 SIZE A3

JAE-CONNECTOR.COM Reference Only

LEAD FREE この製品は鉛フリー品です

JAE CONNECTOR DIV. PROPRIETARY.
COPYRIGHT (C) 2004, JAPAN AVIATION ELECTRONICS INDUSTRY, LTD.

DOF-0-212E(03.08)