Chipsmall Limited consists of a professional team with an average of over 10 year of expertise in the distribution of electronic components. Based in Hongkong, we have already established firm and mutual-benefit business relationships with customers from,Europe,America and south Asia,supplying obsolete and hard-to-find components to meet their specific needs.

With the principle of “Quality Parts,Customers Priority,Honest Operation,and Considerate Service”,our business mainly focus on the distribution of electronic components. Line cards we deal with include Microchip,ALPS,ROHM,Xilinx,Pulse,ON,Everlight and Freescale. Main products comprise IC,Modules,Potentiometer,IC Socket,Relay,Connector.Our parts cover such applications as commercial,industrial, and automotives areas.

We are looking forward to setting up business relationship with you and hope to provide you with the best service and solution. Let us make a better world for our industry!

Contact us

Tel: +86-755-8981 8866 Fax: +86-755-8427 6832
Email & Skype: info@chipsmall.com Web: www.chipsmall.com
Address: A1208, Overseas Decoration Building, #122 Zhenhua RD., Futian, Shenzhen, China

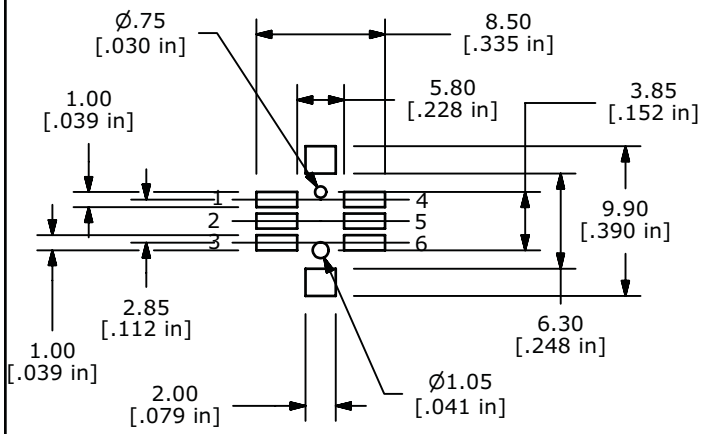

SOLDER LAYOUT

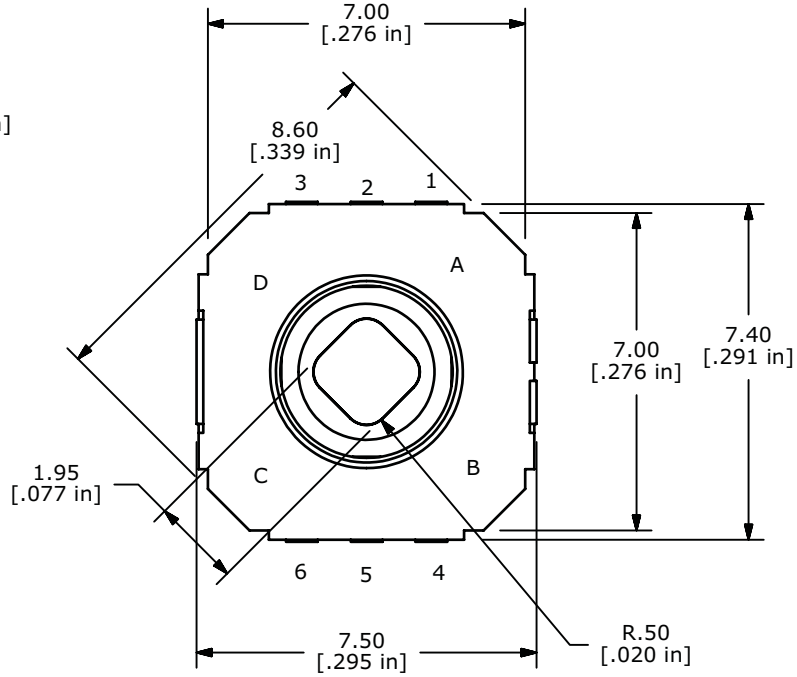

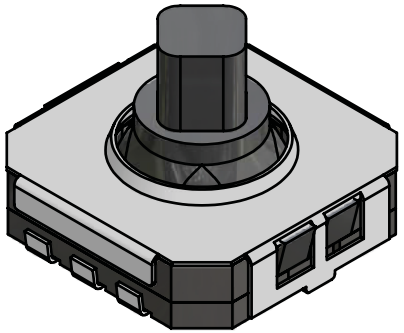

ISOMETRIC

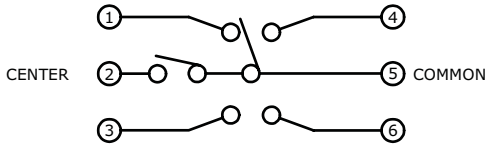

CIRTUIT DIAGRAM

OPERATING POSITION	CIRCUIT
A	5-1
B	5-4
C	5-6
D	5-3
CENTER PUSH	5-2

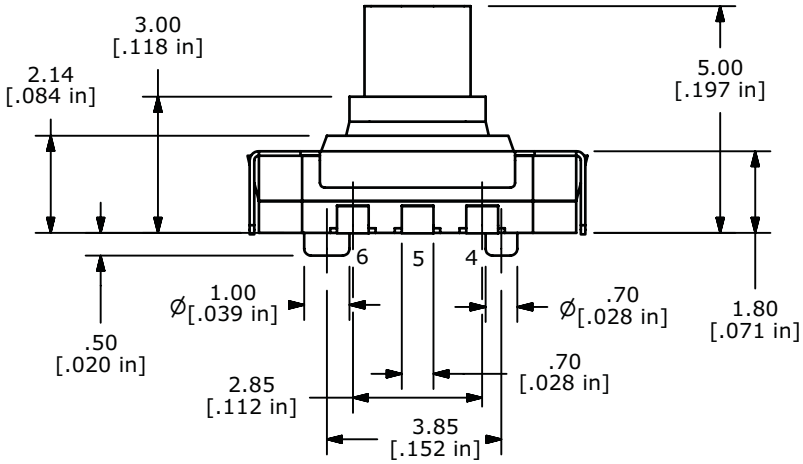

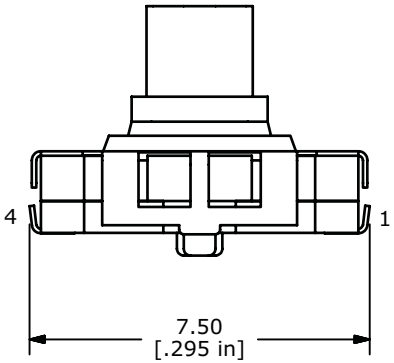

NOTES:
1. RATING: 12V DC 50mA MAX.
2. CONTACT RESISTANCE: 500 milli OHMS MAX.
3. OPERATING FORCES: CENTER PUSH: 320gf ± 70gf
   STROKE: 0.15± 0.1 mm
   4-WAY DIRECTION: 160gf ± 50gf
4. LIFE CYCLES: 200,000
5. GENERAL TOLERANCE: ± 0.3

E-SWITCH®

REV	PCR NO	DESCRIPTION	DATE	BY
A	15947	NEW RELEASE	4/5/06	PH

TITLE	SCALE	DATE	DR	DWG	REV
JS1200AAQ	6:1	4/5/2006	PH	P000500	A