Chipsmall Limited consists of a professional team with an average of over 10 year of expertise in the distribution of electronic components. Based in Hongkong, we have already established firm and mutual-benefit business relationships with customers from,Europe,America and south Asia,supplying obsolete and hard-to-find components to meet their specific needs.

With the principle of “Quality Parts,Customers Priority,Honest Operation,and Considerate Service”,our business mainly focus on the distribution of electronic components. Line cards we deal with include Microchip,ALPS,ROHM,Xilinx,Pulse,ON,Everlight and Freescale. Main products comprise IC,Modules,Potentiometer,IC Socket,Relay,Connector.Our parts cover such applications as commercial,industrial, and automotives areas.

We are looking forward to setting up business relationship with you and hope to provide you with the best service and solution. Let us make a better world for our industry!

Contact us

Tel: +86-755-8981 8866 Fax: +86-755-8427 6832
Email & Skype: info@chipsmall.com Web: www.chipsmall.com
Address: A1208, Overseas Decoration Building, #122 Zhenhua RD., Futian, Shenzhen, China

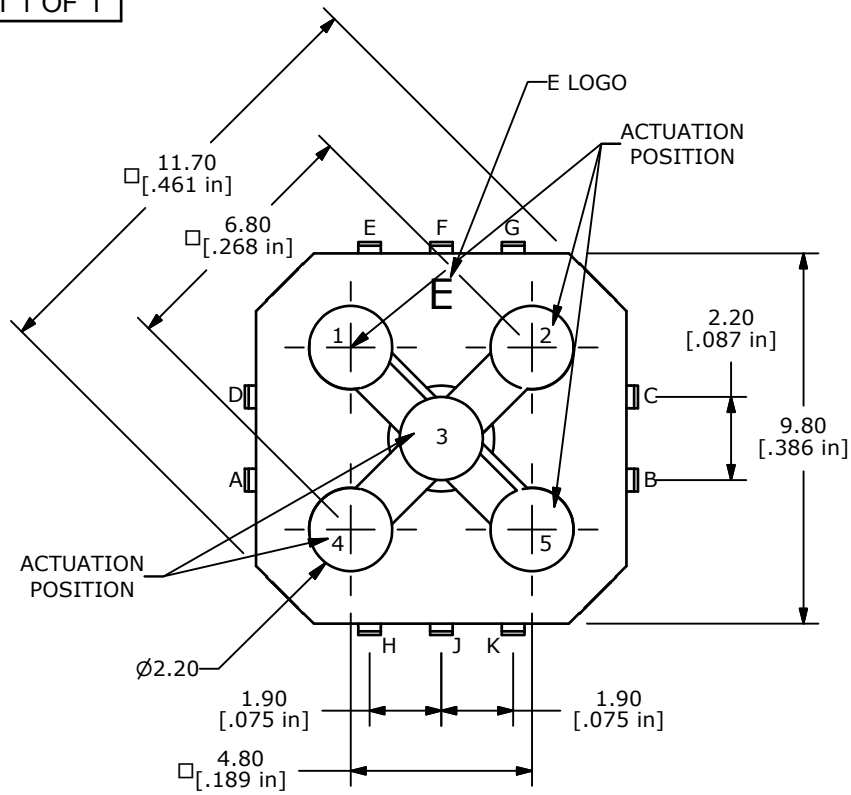

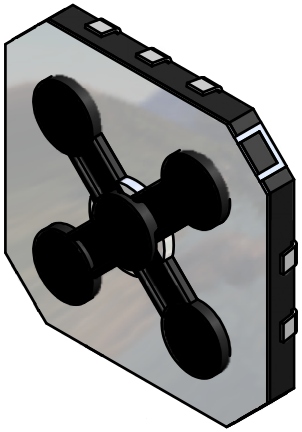

NOTES:

1. ALL DIMENSIONS IN MM[INCH]
2. GENERAL TOLERANCE: X.XX=± 0.2mm
3. RATING: DC 12V, 50mA
4. CONTACT ARRANGEMENT: SPST, NORMALLY OPEN.
5. OPERATING TEMP: -20C TO +70C
6. STORAGE TEMP: -40C TO +85C
7. PACKAGE: TAPE AND REEL, 2500 PER REEL.
8. CONTACT MATERIAL: SILVER
9. CONTACT RESISTANCE: 100m Ohms MAX(Initial).
10. INSULATION RESISTANCE: 100M Ohms Min.
11. 2002/95/EC (ROHS) COMPLIANT
12. ▲ACTUATION FORCE: 320+80/-60 GRAMS CENTER, 180+/-60 4 TILT POSITIONS.
13. ▲TRAVEL: 0.25± 0.15mm
14. OPERATING LIFE: 200,000 CYCLES.
15. ▲DENOTES CRITICAL PARAMETER.

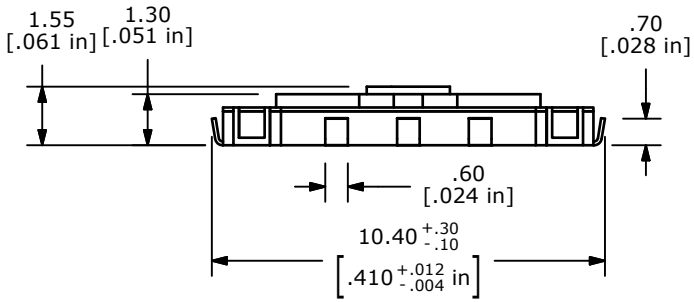

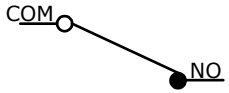

CIRCUIT: SPST
NORMALLY OPEN

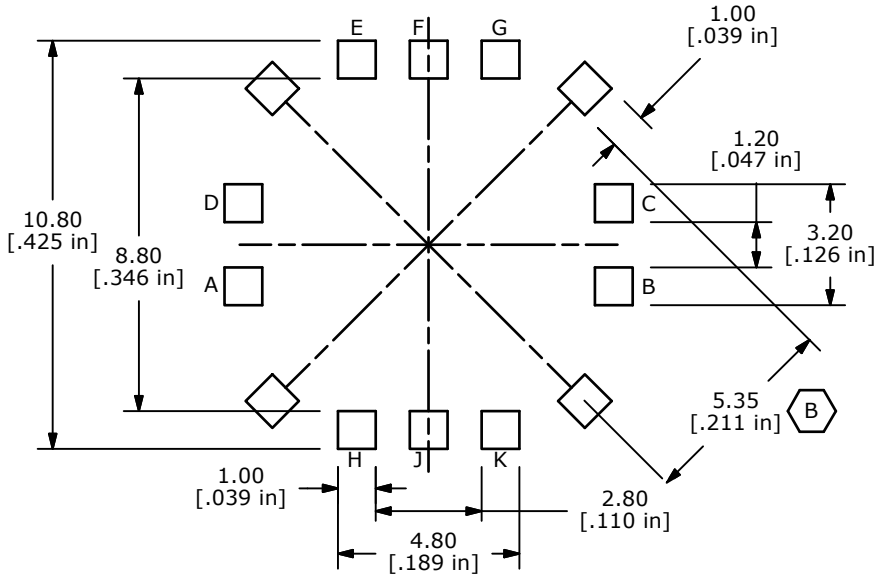

P.C.B. LAYOUT

CIRCUIT TABLE	
ACTUATION POSITION	CIRCUIT
1	D-E
2	C-G
3	F-J
4	A-H
5	B-K

REV	PCR NO	DESCRIPTION	DATE	BY
D	19618	DRAWING CLEAN-UP	01/25/11	BMA
C	18001	Update Notes to New Spec	3/10/08	rc
B	17906	chg location of 5.35 dim	12/20/07	rc
A	16777	RELEASED FOR PRODUCTION	12/20/06	TN

E-SWITCH™

TITLE JS1300AQ

SCALE	DATE	DR	DWG	REV
5:1	12/20/2006	TN	N211123	D