Chipsmall Limited consists of a professional team with an average of over 10 year of expertise in the distribution of electronic components. Based in Hongkong, we have already established firm and mutual-benefit business relationships with customers from,Europe,America and south Asia,supplying obsolete and hard-to-find components to meet their specific needs.

With the principle of “Quality Parts,Customers Priority,Honest Operation,and Considerate Service”,our business mainly focus on the distribution of electronic components. Line cards we deal with include Microchip,ALPS,ROHM,Xilinx,Pulse,ON,Everlight and Freescale. Main products comprise IC,Modules,Potentiometer,IC Socket,Relay,Connector.Our parts cover such applications as commercial,industrial, and automotives areas.

We are looking forward to setting up business relationship with you and hope to provide you with the best service and solution. Let us make a better world for our industry!

Contact us

Tel: +86-755-8981 8866 Fax: +86-755-8427 6832
Email & Skype: info@chipsmall.com Web: www.chipsmall.com
Address: A1208, Overseas Decoration Building, #122 Zhenhua RD., Futian, Shenzhen, China

SHEET OF

NOTES:
1. ALL DIMENSION IN MM [INCH]
2. GENERAL TOLERANCE: X.X=±0.4
   X.XX=±0.25
3. TERM. NOS. FOR REF. ONLY
4. CONTACT RATING SWITCHING: 150mA, 250V AC/DC
   350mA, 110V AC/DC
5. OPERATING FORCE: 425±100 CM/STANDARD
6. OPERATING TEMP: −30° to 85°C
7. ▲ CIRCUIT 4Pole: 3 POSITIONS, 30° INDEX.
8. DIELECTRIC STRENGTH: 1000V RMS min.@SEA LEVEL.
9. ▲ DESIGNATE MAJOR DIMENSIONS
10. ▲ HARDWARE SUPPLIED ON SWITCH −SEE BELOW
    LOCKING RING, LOCKWASHER, & HEX NUT.

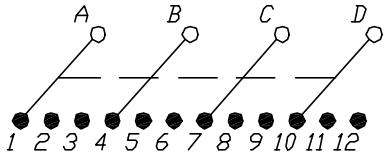

CONTACT CONFIGURATION
Timing: SHORTING

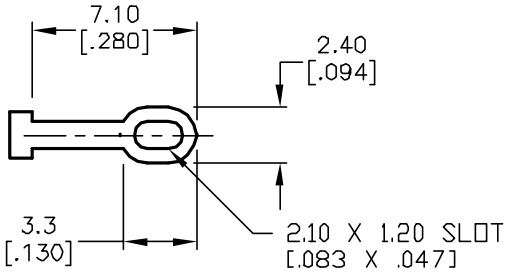

TERMINATION DETAIL
SCALE 2X

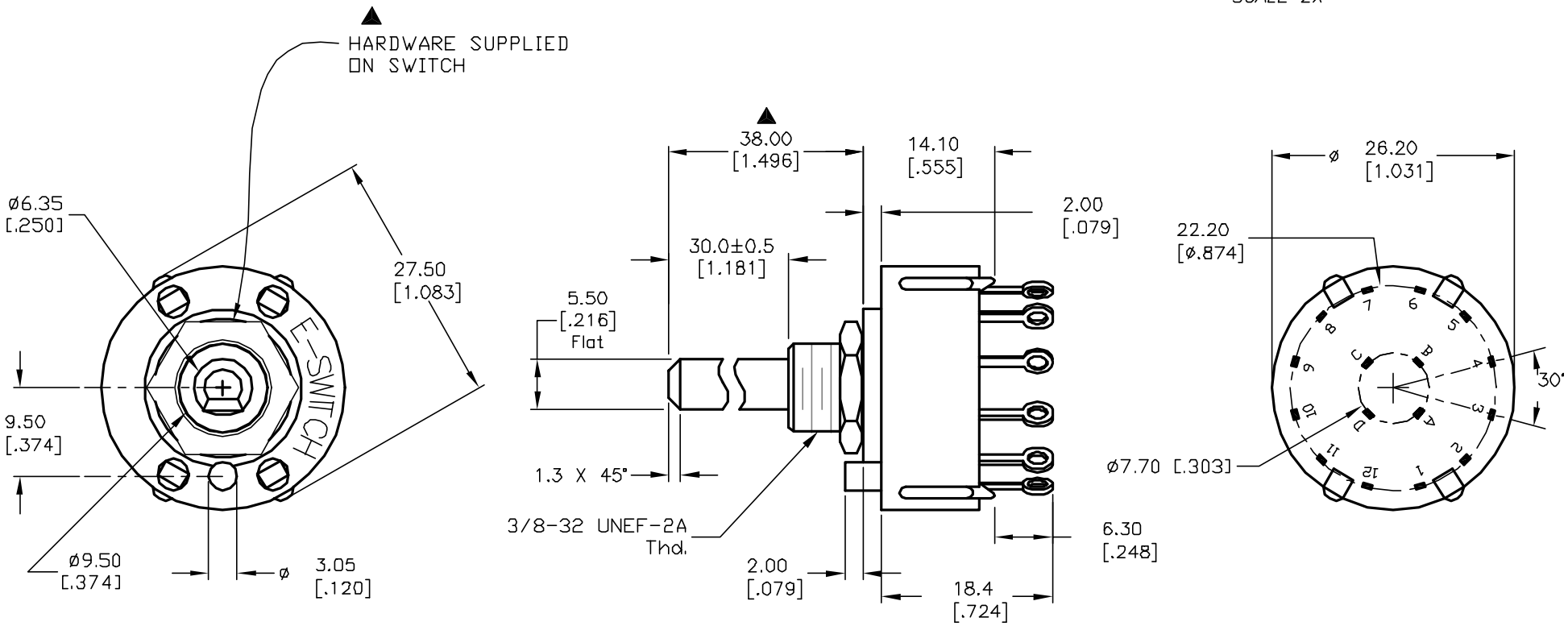

REV.	ECN No.	DESCRIPTION	DATE	CHKD
A	12958	RELEASED FOR PRODUCTION	3/25/03	AR

THE INFORMATION CONTAINED IN THIS DOCUMENT IS PROPRIETARY TO E-SWITCH AND IS NOT TO BE COPIED OR TRANSFERRED

E-SWITCH®

TITLE KC43A30.001SLS

SCALE	DATE	DR	DWG	REV
1.5:1	3/25/03	AR	G510269	B