Chipsmall Limited consists of a professional team with an average of over 10 year of expertise in the distribution of electronic components. Based in Hongkong, we have already established firm and mutual-benefit business relationships with customers from,Europe,America and south Asia,supplying obsolete and hard-to-find components to meet their specific needs.

With the principle of “Quality Parts,Customers Priority,Honest Operation,and Considerate Service”,our business mainly focus on the distribution of electronic components. Line cards we deal with include Microchip,ALPS,ROHM,Xilinx,Pulse,ON,Everlight and Freescale. Main products comprise IC,Modules,Potentiometer,IC Socket,Relay,Connector.Our parts cover such applications as commercial,industrial, and automotives areas.

We are looking forward to setting up business relationship with you and hope to provide you with the best service and solution. Let us make a better world for our industry!

Contact us

Tel: +86-755-8981 8866 Fax: +86-755-8427 6832
Email & Skype: info@chipsmall.com Web: www.chipsmall.com
Address: A1208, Overseas Decoration Building, #122 Zhenhua RD., Futian, Shenzhen, China

XMC1000 LED lighting application kit

XMC™ microcontrollers
July 2016

Agenda

Agenda

Kit overview (1/3)

› XMC1200 CPU Card

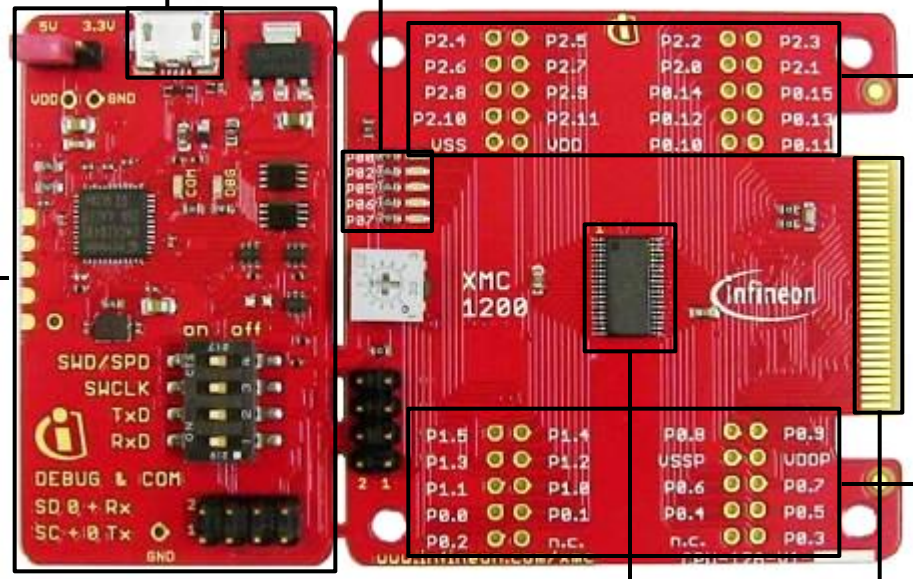

Kit overview (2/3)

- Color LED card
  - Showcases color control

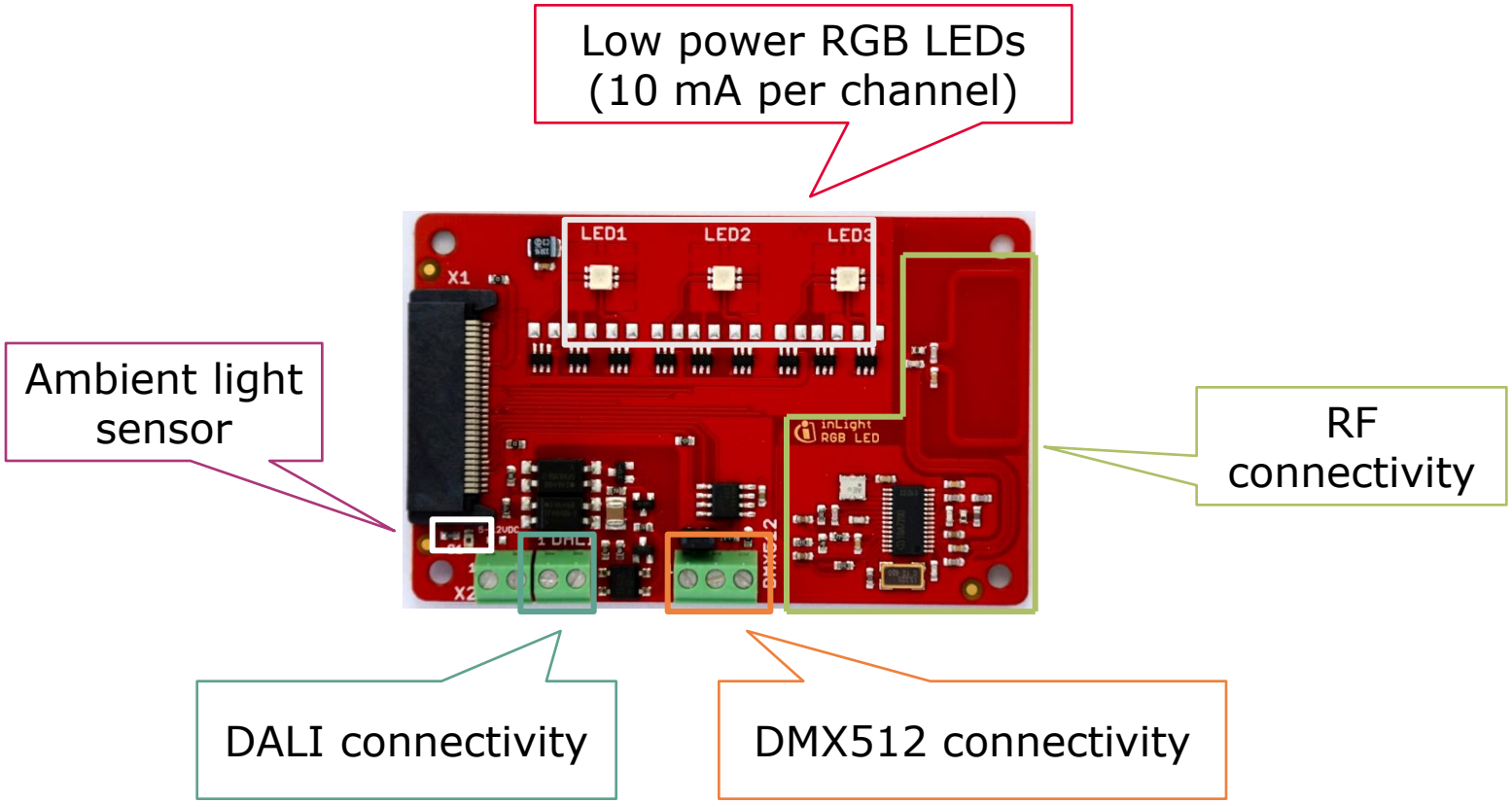

Kit overview (3/3)

- White LED card
  - Showcases brightness control

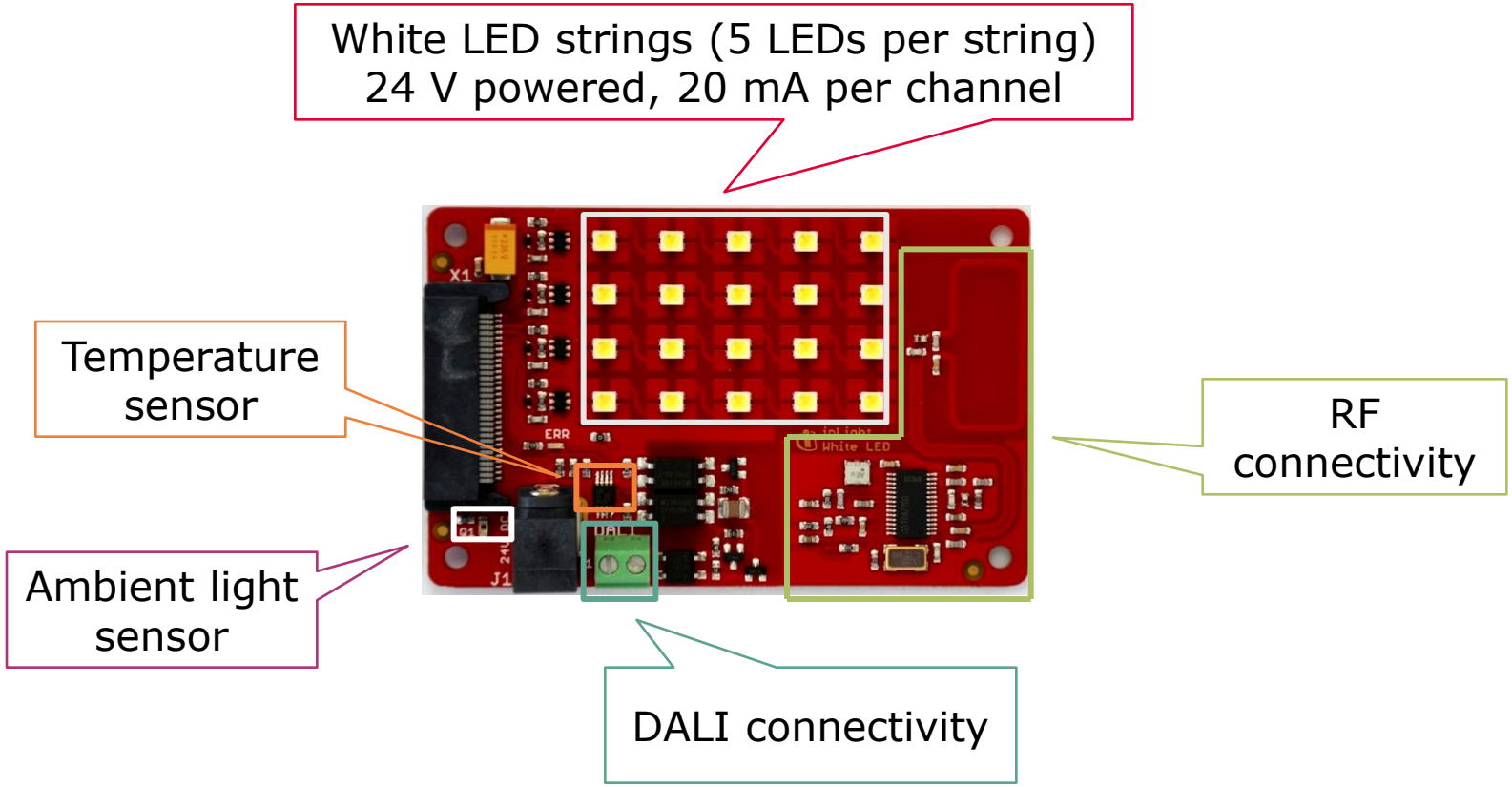

Agenda

Hardware overview

- Attach color LED or white LED card to XMC1200 CPU card
- Connect XMC1200 CPU card to PC via USB cable
- CPU card is powered up (as indicated by LED on the card)

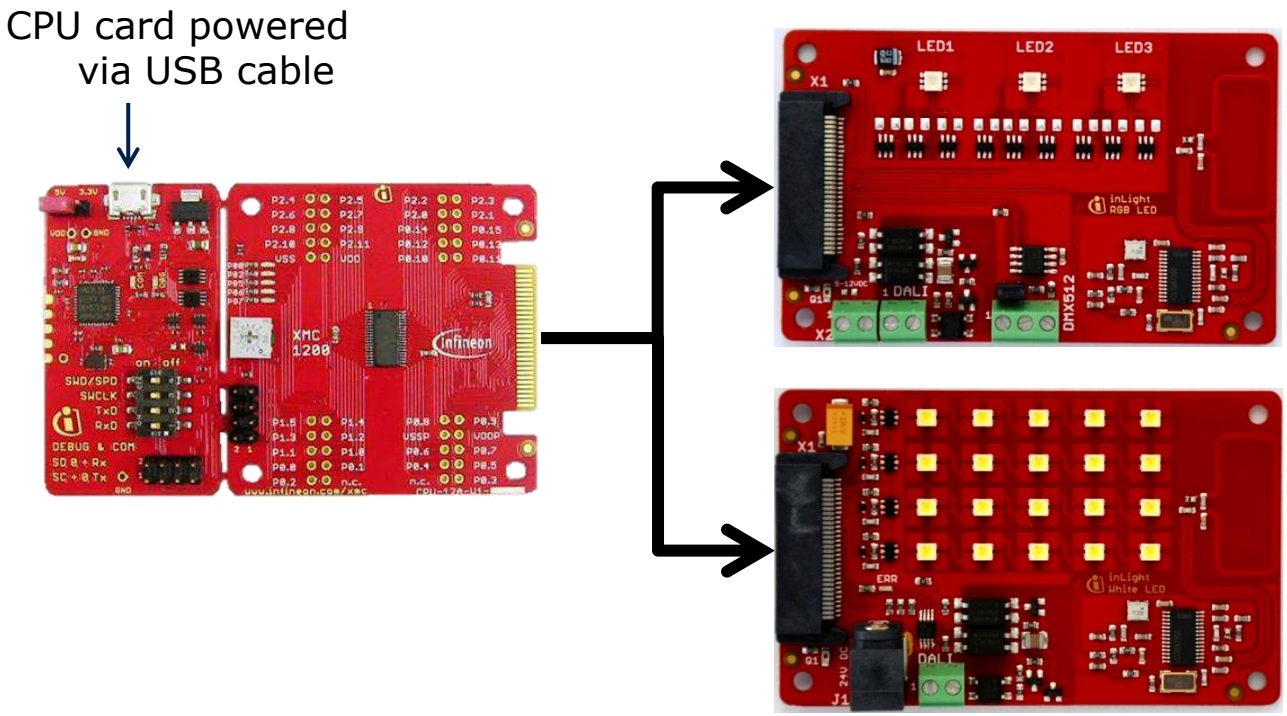

Agenda

Tooling overview
Boot modes

- Boot modes available
  - UART bootstrap-loader mode
  - User mode (Halt after reset)
  - User mode (Debug) **Default mode of device on boot kit**
  - User mode (Productive)

- Boot modes can be configured via:
  - DAVE™
    - Download DAVE™

    http://www.infineon.com/dave/v4
  - MemTool
    - Download MemTool

    http://www.infineon.com/cms/en/product/channel.html?channel=ff80808112ab681d0112ab6b50fe07c9

- For more information on how to configure the BMI value, please refer to the XMC1000 tooling guide

Agenda

Tooling overview
DAVE™

- DAVE™ is a free development platform for code generation by Infineon
- It can be downloaded from:
  - http://www.infineon.com/dave/v4
- For a guide on setting up DAVE™, please refer to XMC1x00 boot kit getting started

Agenda

Getting started – Example 1
RGB lamp using LED_LAMP APP (1/20)

Example 1: RGB lamp using LED_LAMP APP

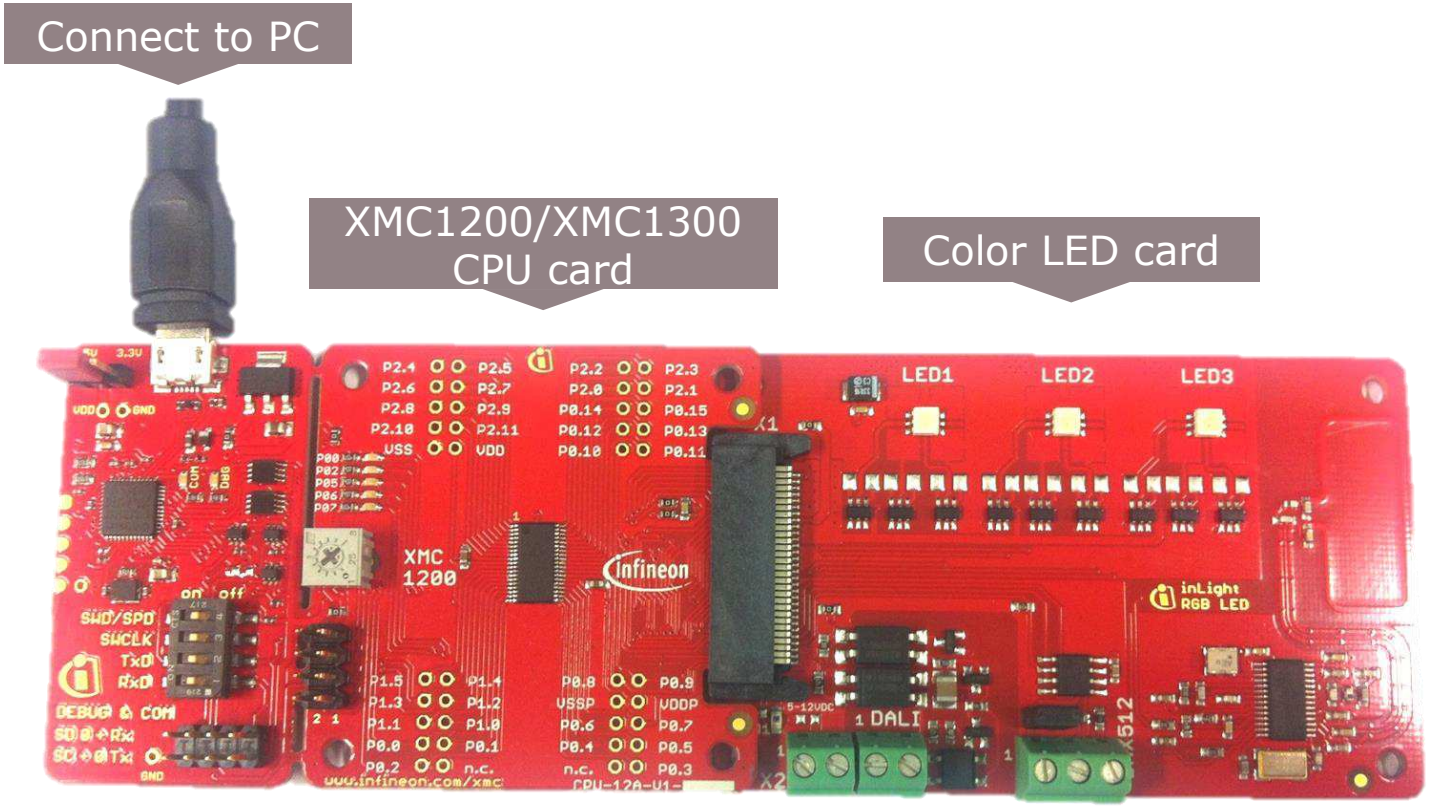

Getting started – Example 1
RGB lamp using LED_LAMP APP (2/20)

1. Open DAVE™

2. In DAVE™ workspace, create a new "DAVE™ CE" project:

› File->New->DAVE™ Project

› Give the project a name e.g. "RGB_LAMP_EXAMPLE"

› Select "DAVE™ CE Project" as project type

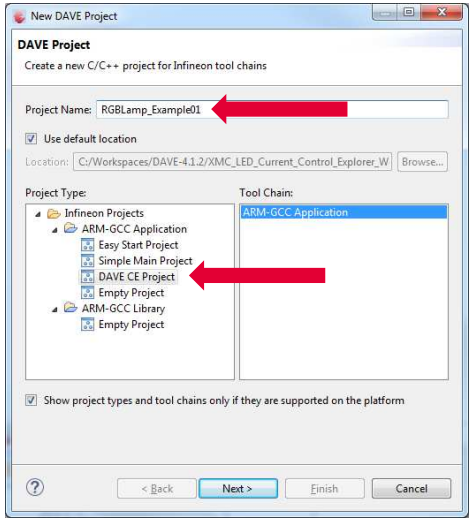

3. Select the device accordingly

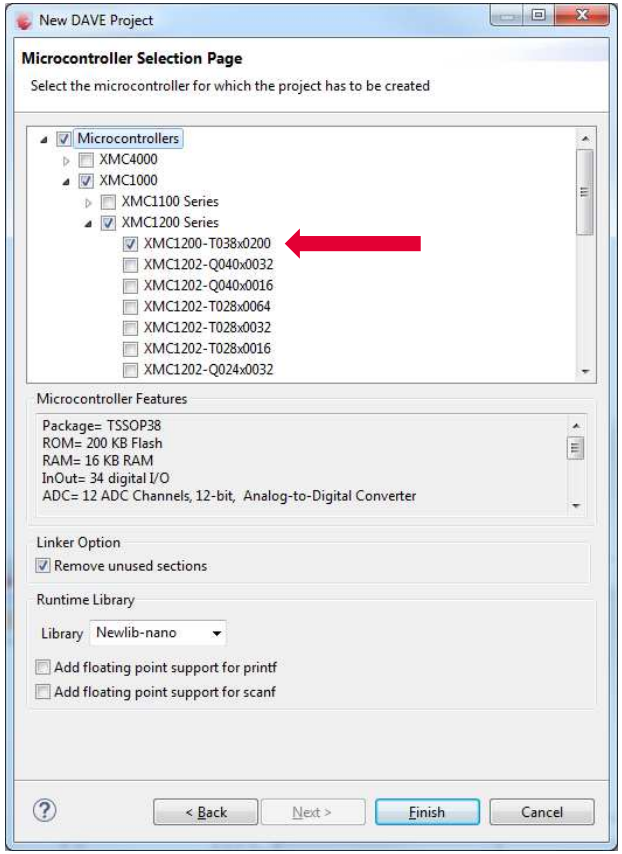

Getting started – Example 1
RGB lamp using LED_LAMP APP (3/20)

- This example demonstrates RGB lamp functionality using LED_LAMP APP
- We will use the system timer (SysTick) as the time base for the interrupt
  - Time base of 1 s
  - In the interrupt, a new target dimming level or target color is regularly set with a 7 s transition time
- Next, we will show you the steps to creating this project:

1. Instantiate LED_LAMP APP
2. Configure LED_LAMP APP
3. Configure BCCU Channels
4. Assign PDM_BCCU APPs to the right channels
5. Configure Brightness and Color Control Unit (BCCU) global settings
6. Configure Port Pins
7. Configure SysTick
8. Define the SYSTIMER callback function

Getting started – Example 1
RGB lamp using LED_LAMP APP (4/20)

1. Instantiate LED_LAMP APP
   - Click  to add new APP
   - Select the **LED_LAMP** APP
   - LED_LAMP APP automatically aggregates a BCCU channel app (**PDM_BCCU**), a BCCU dimming engine app (**DIM_BCCU**) and a BCCU global app (**GLOBAL_BCCU)**

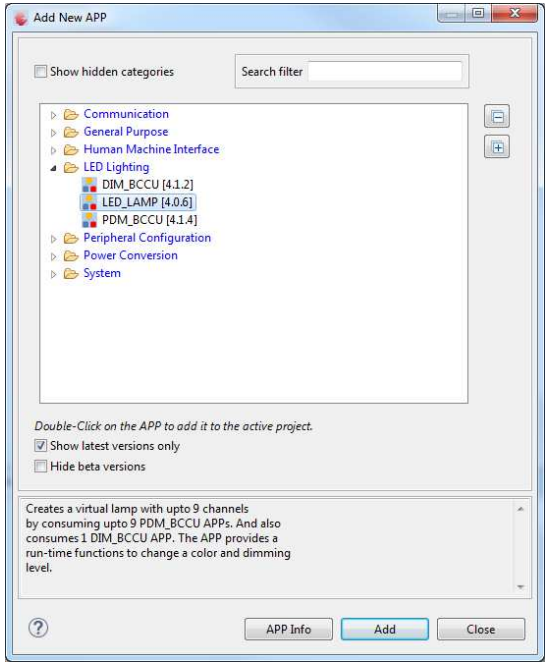

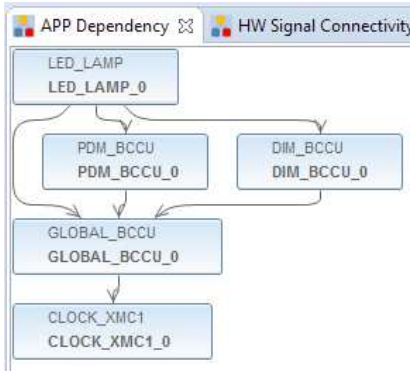

Getting started – Example 1
RGB lamp using LED_LAMP APP (5/20)

2. Configure LED_LAMP APP

› Double-click **LED_LAMP_0** to open UI

› Under **General Settings** tab,

- set **Number of LED channels** to **3**
- select **Dimming Engine** as **Dimming Source**

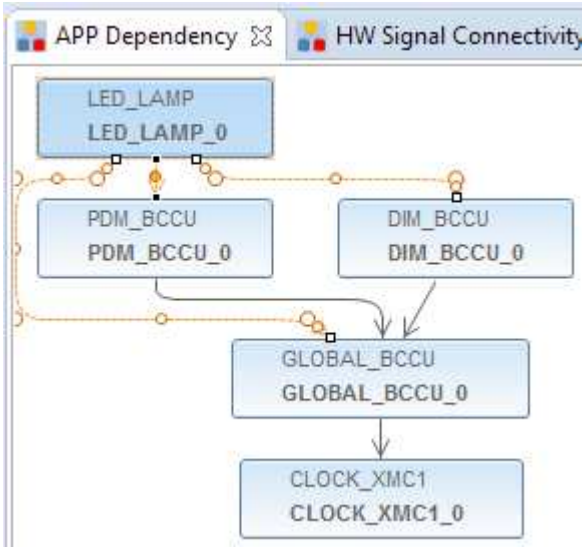

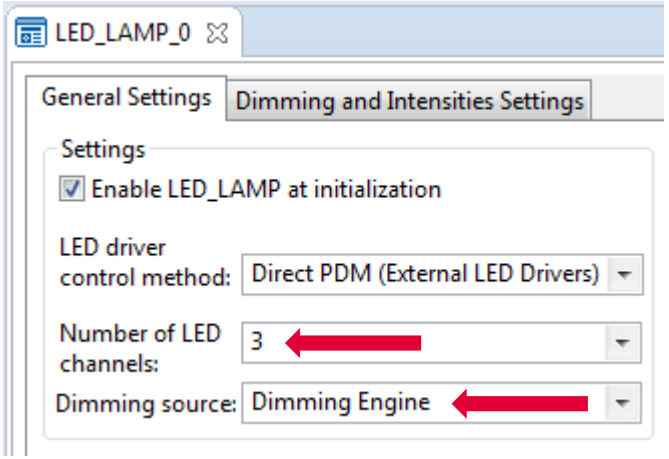

Getting started – Example 1
RGB lamp using LED_LAMP APP (6/20)

2. Configure LED_LAMP APP (continued)

› Under **Dimming and Intensities Settings** tab

- set initial **Dimming Level** to **1024**
- set initial **Channel Intensities** to **1365**
- set initial **Intensity linear walk time** to **0 ms**
- Set initial **0-100% dimming transition time** to **0 ms**

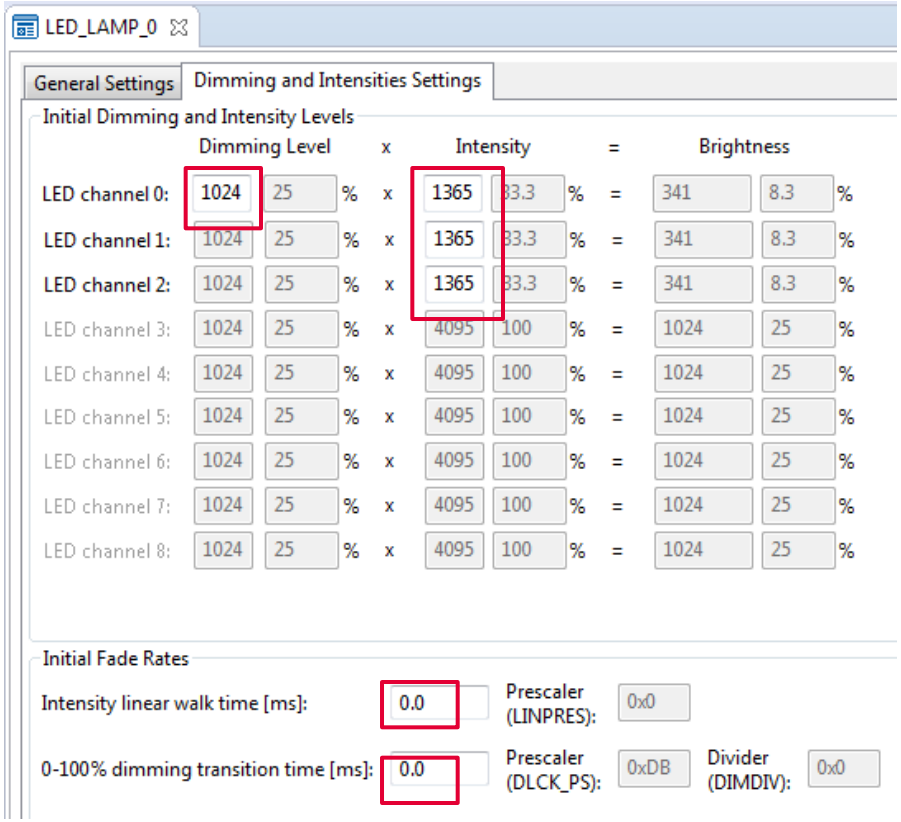

Getting started – Example 1
RGB lamp using LED_LAMP APP (7/20)

2. Configure LED_LAMP APP (continued)

› Rename Instance Label

- **Right-click** LED_LAMP APP
- Select **Rename Instance Label…**
- Rename as **RGB_LAMP**

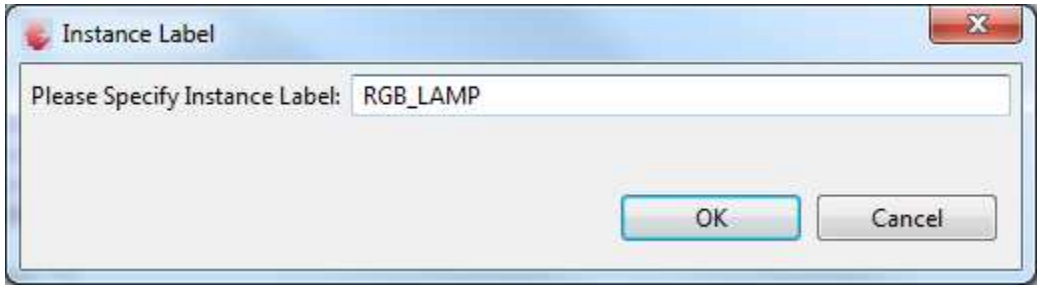

Getting started – Example 1
RGB lamp using LED_LAMP APP (8/20)

3. Configure BCCU Channels

› Double-click a **PDM_BCCU APP**

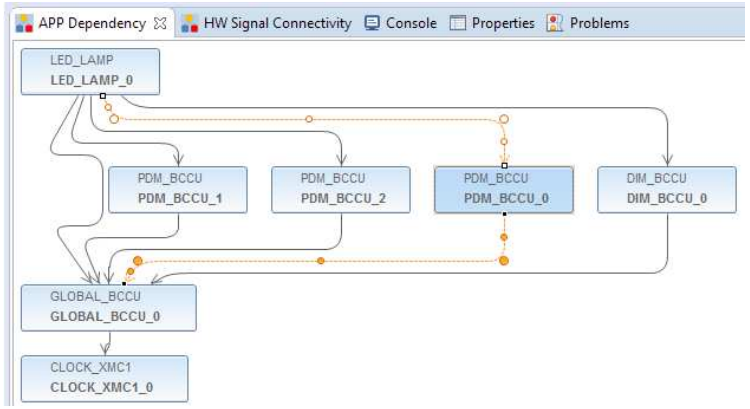

› Select **Flicker Watchdog (WD)** to enable

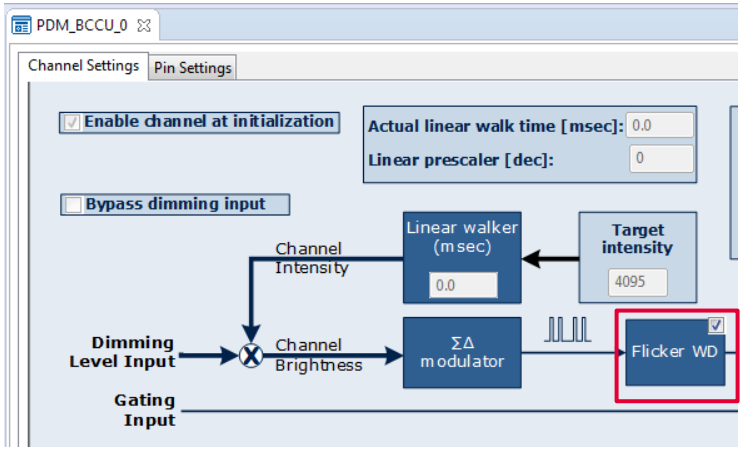

› Repeat for the other 2 PDM_BCCU APP instances

Getting started – Example 1
RGB lamp using LED_LAMP APP (9/20)

4. Assign PDM_BCCU APPs to the right channels

› Hover mouse cursor over the connecting arrow to a PDM_BCCU APP

› A label will appear momentarily e.g. LED0/LED1/LED2

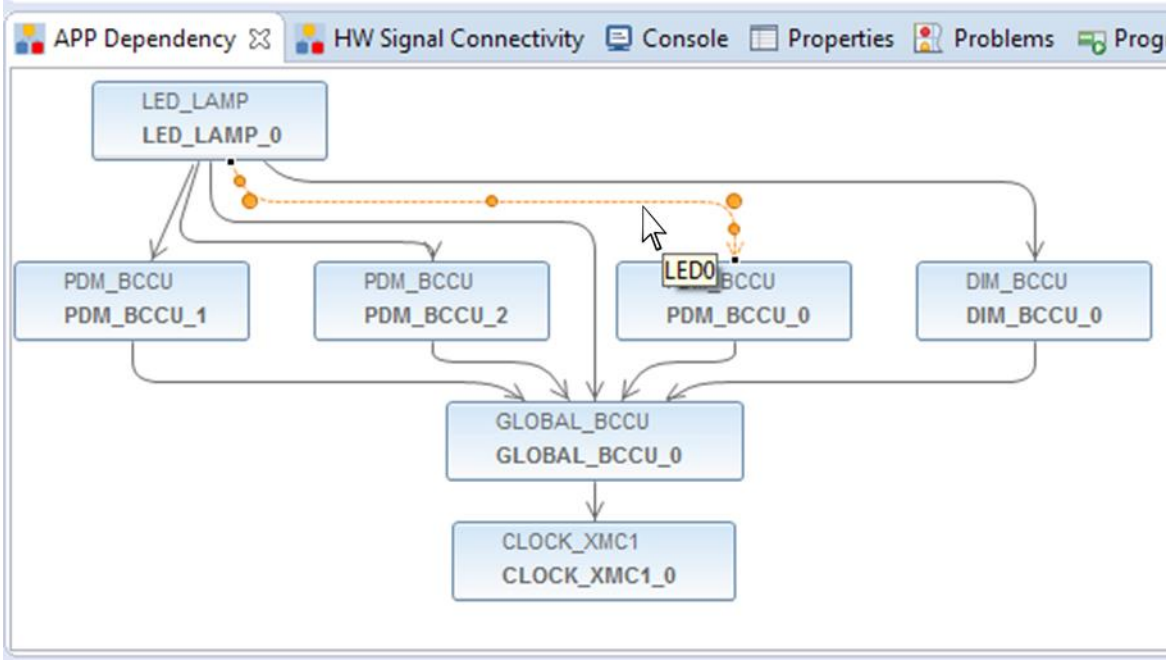

Getting started – Example 1
RGB lamp using LED_LAMP APP (10/20)

4. Assign PDM_BCCU APPs to the right channels (continued)

› The labels correspond to the LED channels in the UI

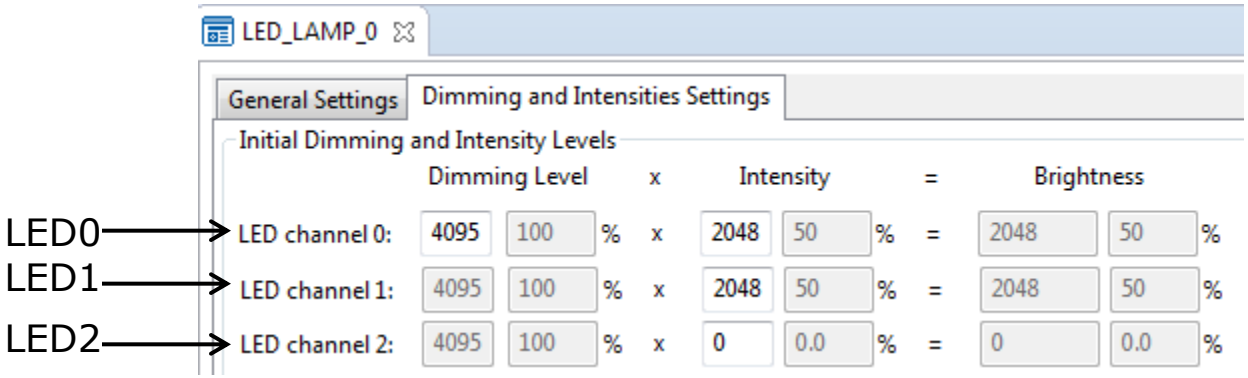

› Rename the PDM_BCCU instance label according to the table below

- Right-click PDM_BCCU APP
- Select "Rename Instance Label"

Label	New Label
LED0	R_LED1
LED1	G_LED1
LED2	B_LED1

- Repeat the above steps with the other 2 PDM_BCCU APP instances

Getting started – Example 1
RGB lamp using LED_LAMP APP (11/20)

4. Assign PDM_BCCU APPs to the right channels (continued)

› Click 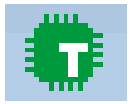 to assign pins to PDM_BCCU APPs

› Assign pins as shown:

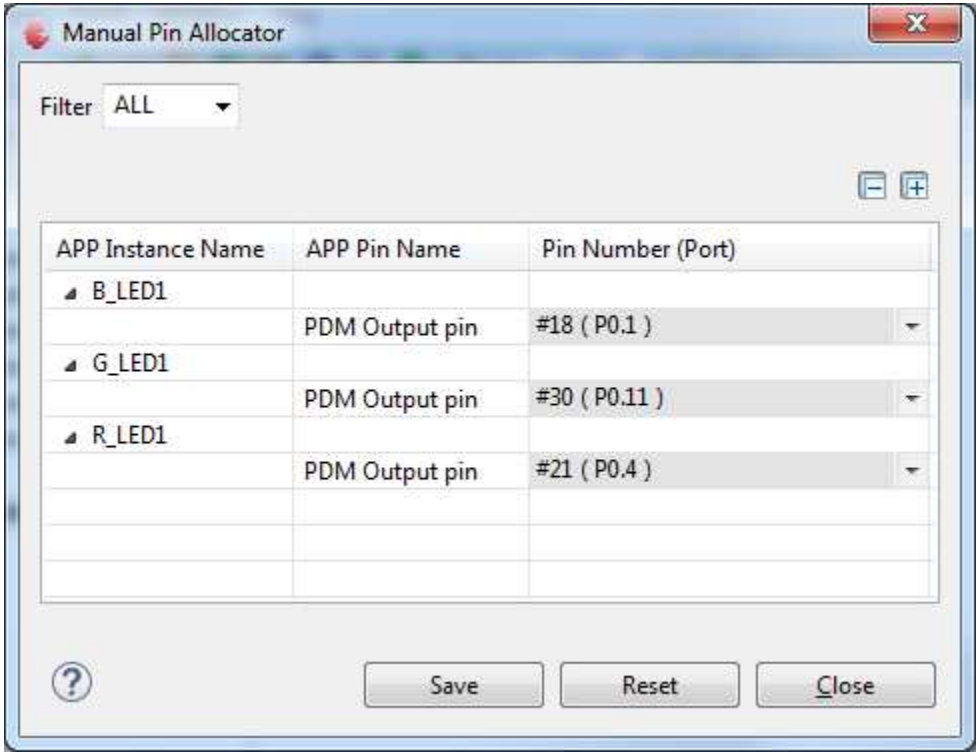

Getting started – Example 1
RGB lamp using LED_LAMP APP (12/20)

5. Configure BCCU global settings

› Double-click **GLOBAL_BCCU_0** in **APP Dependency tab**

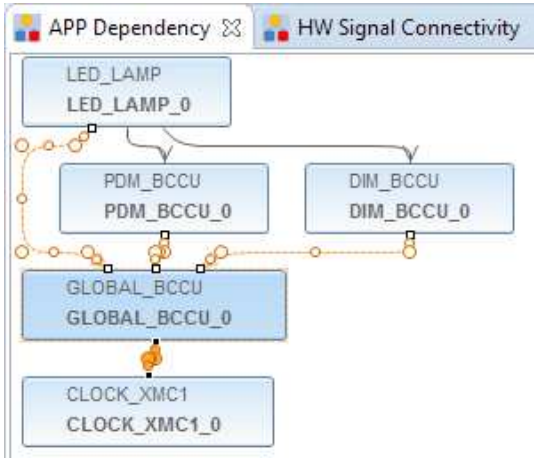

› Under **Clock Settings** tab,

- to get a bit time of 5 us
- change the **Desired Fast Clock Frequency** to **0.8 MHz**