Chipsmall Limited consists of a professional team with an average of over 10 year of expertise in the distribution of electronic components. Based in Hongkong, we have already established firm and mutual-benefit business relationships with customers from,Europe,America and south Asia,supplying obsolete and hard-to-find components to meet their specific needs.

With the principle of “Quality Parts,Customers Priority,Honest Operation,and Considerate Service”,our business mainly focus on the distribution of electronic components. Line cards we deal with include Microchip,ALPS,ROHM,Xilinx,Pulse,ON,Everlight and Freescale. Main products comprise IC,Modules,Potentiometer,IC Socket,Relay,Connector.Our parts cover such applications as commercial,industrial, and automotives areas.

We are looking forward to setting up business relationship with you and hope to provide you with the best service and solution. Let us make a better world for our industry!

Contact us

Tel: +86-755-8981 8866 Fax: +86-755-8427 6832
Email & Skype: info@chipsmall.com Web: www.chipsmall.com
Address: A1208, Overseas Decoration Building, #122 Zhenhua RD., Futian, Shenzhen, China

XMC4000 Application Kit

For XMC4000 Family

CPU_45A-V3

CPU Board XMC4500 General Purpose

Board User's Manual

Revision 1.0, 2014-01-10

Microcontroller

Edition 2014-01-10

Published by
Infineon Technologies AG
81726 Munich, Germany

Legal Disclaimer

The information given in this document shall in no event be regarded as a guarantee of conditions or characteristics. With respect to any examples or hints given herein, any typical values stated herein and/or any information regarding the application of the device, Infineon Technologies hereby disclaims any and all warranties and liabilities of any kind, including without limitation, warranties of non-infringement of intellectual property rights of any third party.

Information

For further information on technology, delivery terms and conditions and prices, please contact the nearest Infineon Technologies Office (**www.infineon.com**).

Warnings

Due to technical requirements, components may contain dangerous substances. For information on the types in question, please contact the nearest Infineon Technologies Office.

Infineon Technologies components may be used in life-support devices or systems only with the express written approval of Infineon Technologies, if a failure of such components can reasonably be expected to cause the failure of that life-support device or system or to affect the safety or effectiveness of that device or system. Life support devices or systems are intended to be implanted in the human body or to support and/or maintain and sustain and/or protect human life. If they fail, it is reasonable to assume that the health of the user or other persons may be endangered.

Revision History	
Page or Item	**Subjects (major changes since previous revision)**
Revision V1.0, 2014-01-10	Initial release

Table of Contents

List of Figures

List of Tables

Introduction

This document describes the features and hardware details of the CPU Board XMC4500 General Purpose (CPU_45A-V3) designed to work with Infineon's XMC4500 Microcontroller. This board is part of Infineon's XMC4000 Application Kits.

1 Overview

The CPU board CPU_45A-V3 houses the XMC4500 Microcontroller and three satellite connectors (HMI, COM, ACT) for application expansion. The board along with satellite cards (e.g. HMI_OLED-V1, COM_ETH-V1, AUT_ISO-V1, MOT_GPDLV-V boards) demonstrates the capabilities of XMC4500. The main use case for this board is to demonstrate the generic features of XMC4500 device including tool chain. The focus is safe operation under evaluation conditions. The board is neither cost nor size optimized and does not serve as a reference design.

1.1 Key Features

The CPU_45A-V3 board is equipped with the following features

- XMC4500 (ARM® Cortex™-M4-based) Microcontroller, 120 MHz CPU clock, 1 MByte on-chip Flash, 160 kByte RAM, LQFP-144,
- Connection to XMC4500 satellite cards via satellite connectors COM, HMI and ACT
- USB OTG Host/Device support via micro USB connector
- Debug options
  - On-board Debugger via Debug USB connector
  - Cortex Debug connector 10-pin (0.05")
  - Cortex Debug+ETM connector 20-pin (0.05")
- Reset push button
- 32 MBit quad SPI flash memory
- Boot option switch
- PowerScale Connector: Ready for MCU power consumption analysis
- 5 LED's
  - 3 Power indicating LED's
  - 1 User LEDs (P3.9)
  - 1 RESET LED
  - 1 Debug LED
- User Button connected to P2.15
- Potentiometer, connected to analog input P14.1
- Power supply
  - Via Micro-USB connector in USB device mode
  - Via satellite connector pins (COM/ACT satellites cards can supply power to CPU board)
  - Via Debug USB connector
  - RTC backup battery

1.2 Block Diagram

Figure 1 shows the functional block diagram of the CPU_45A-V3 board. For more information about the power supply please refer to chapter 2.1.

The CPU board has got the following building blocks:

- 3 Satellite Connectors (COM, HMI ACT)
- On-board Debugger via Debug USB connector (Micro-USB)
- User LED connected to P3.9
- User Button connected to P2.15
- Quad SPI flash memory (EE) connected to USIC1 Channel1 with Chip-Select1
- 2 Cortex Debug Connectors
- Variable resistor (POTI) connected to GPIO P14.1
- USB On-The-Go Connector (Micro-USB)

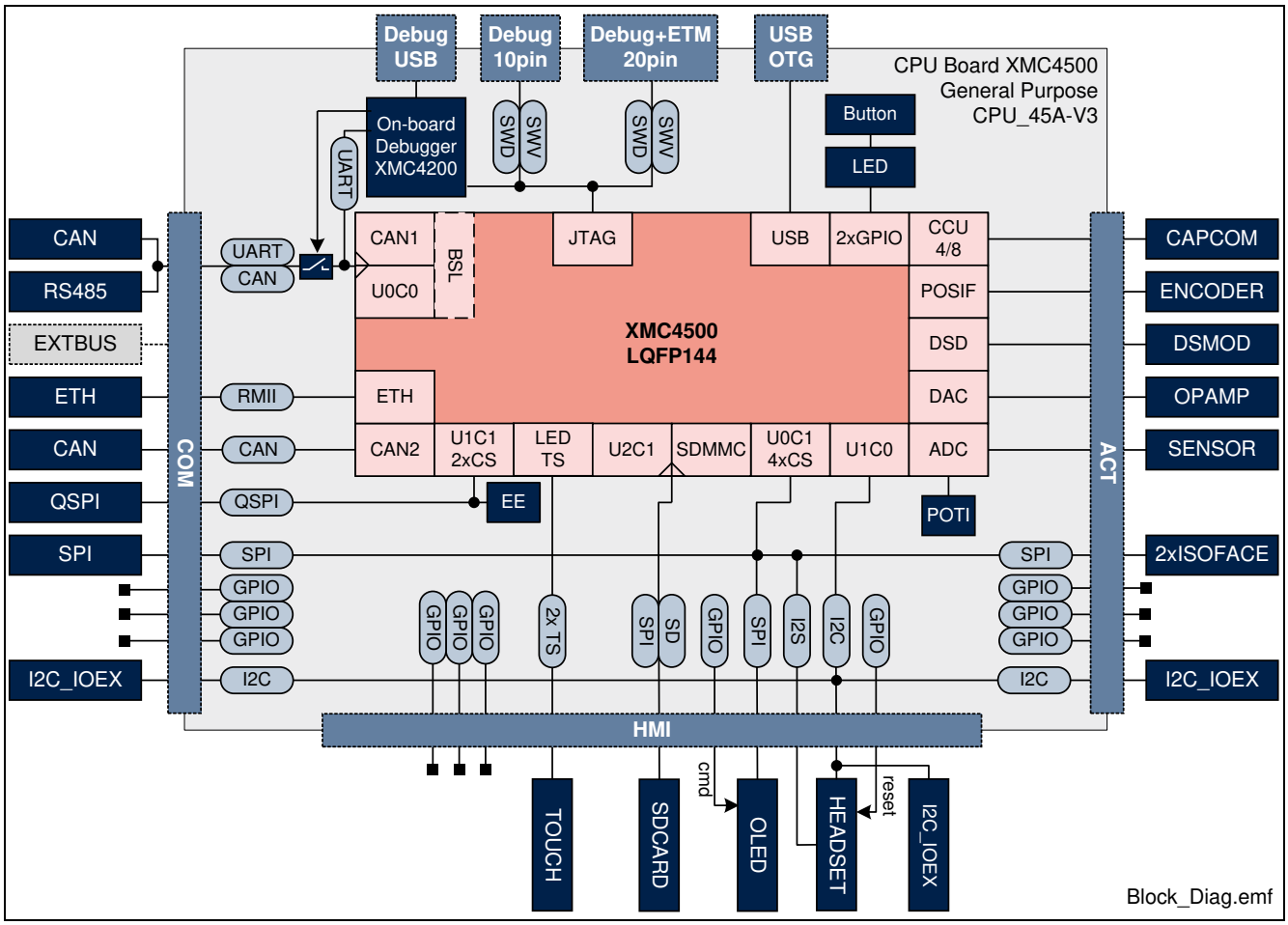

Figure 1 CPU_45A-V3 Board Block Diagram

2 Hardware Description

The following sections give a detailed description of the hardware and how it can be used.

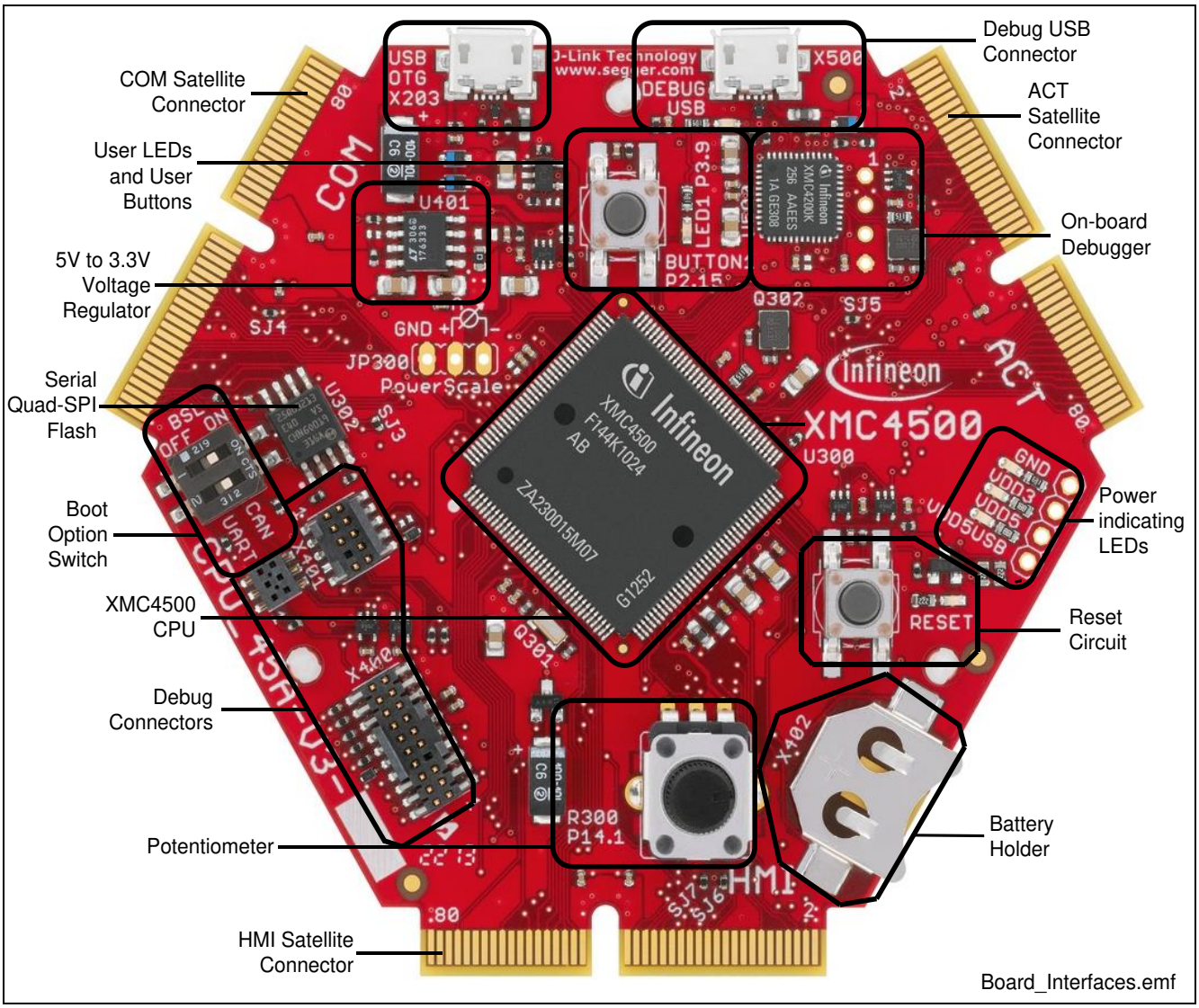

Figure 2 CPU Board XMC4500 General Purpose (CPU_45A-V3)

2.1 Power Supply

The CPU_45A-V3 board can be powered via the USB plug (5 V); however, there is a current limit that can be drawn from the host PC through USB. If the CPU_45A-V3 board is used to drive other satellite cards (e.g. AUT_ISO-V1 or MOT_GPDLV-V2) and the total current required exceeds 500 mA, then the board needs to be powered by either an external power supply connected to USB or by a satellite card, which supports external power supply like e.g. AUT_ISO-V1, MOT_GPDLV-V2, COM_ETH-V1.

For powering the board through USB interface, connect the USB cable provided with the kit to the Micro-USB connector on board.

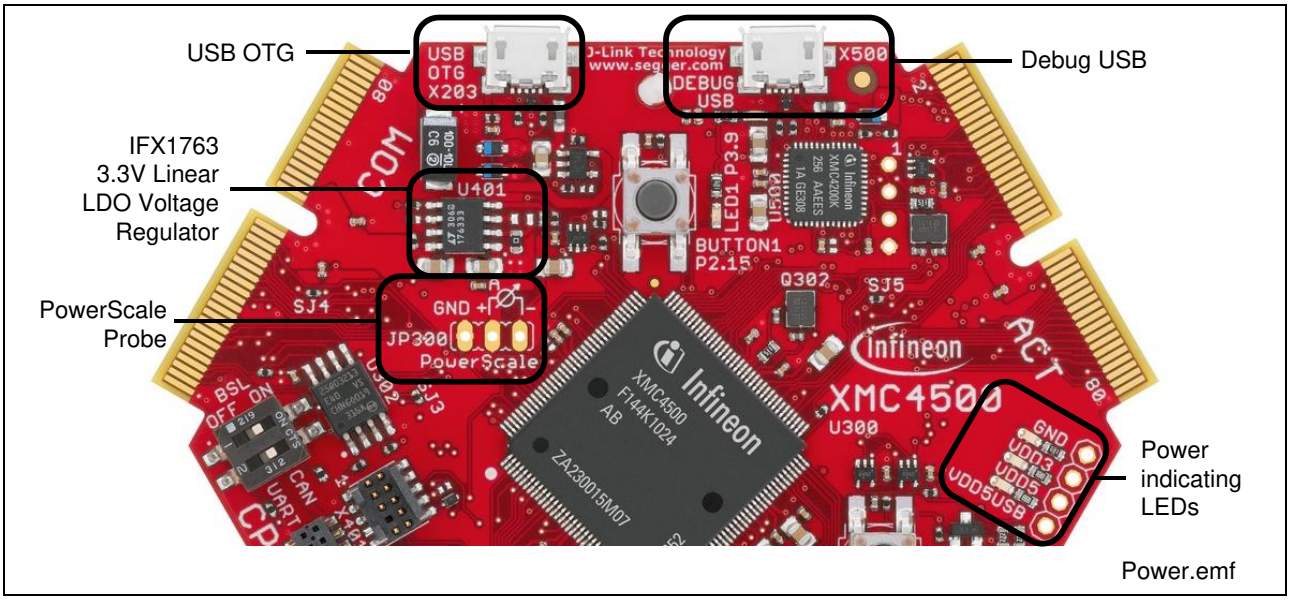

Figure 3 Powering option through USB interface (5 V)

To indicate the power status of CPU_45A-V3 board three LED's are provided on board (See Figure 3). The LED will be "ON" when the corresponding rail is powered.

Table 1 Power status LED's

LED Reference	Power Rail	Voltage	Note
V401	VDD5	5 V	Must always be "ON"
V402	VDD5USB	5 V	"ON" if powered by USB plug
V403	VDD3.3	3.3 V	Must always be "ON"

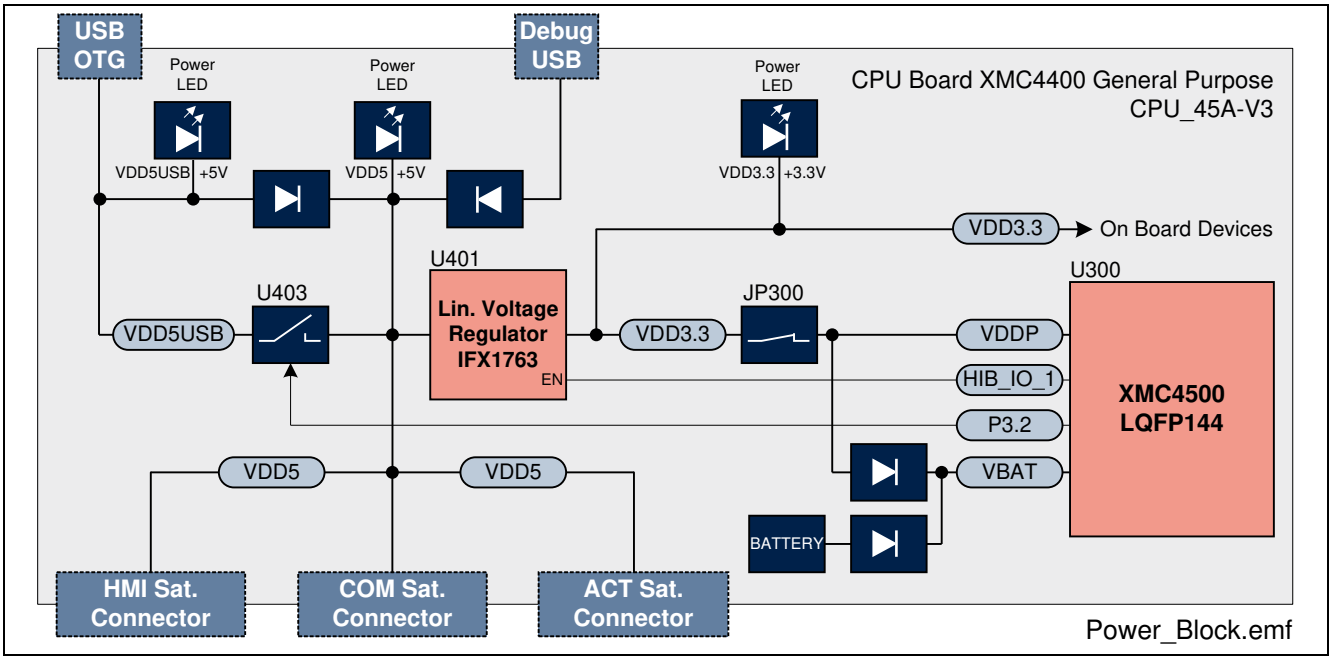

Figure 4 CPU_45A-V3 Board Power

Figure 5 Battery (VBAT Supply)

Hitex PowerScale probe is provided on the CPU_45A-V3 board to measure the power consumption.

Table 2 Power Measurement

Jumper	Function	Description
JP300	PowerScale	A Hitex PowerScale probe can be connected for current sensing the VDD3.3 (CPU power source). Default: pos. 1-2 (closed) *Note: On the PCB there is a shorting trace between pin 1-2. This trace has to be cut first, before using PowerScale. Pin 3 is GND.*

The maximum current drawn by the CPU board without any satellite cards connected is about 150 mA.

2.2 Reset

The reset pin (PORST#) of the XMC45000 is a bi-directional pin. An internal pull-up resistor will keep the PORST# pin high during normal operation. A low level at this pin will force a hardware reset. In case of an internal reset the PORST# pin will drive a low signal. An internal circuit of the XMC4500 ensures a save Power-on-Reset. XMC4500 does not require any additional external components to generate a reset signal during power-up. An on-board reset button (SW400, RESET) supports a hardware reset of the CPU during operation. The reset signal is also routed to all satellite connectors. The reset state is indicated by a red LED (V407). The LED will be “ON” during reset state and will be “OFF” during normal operation conditions.

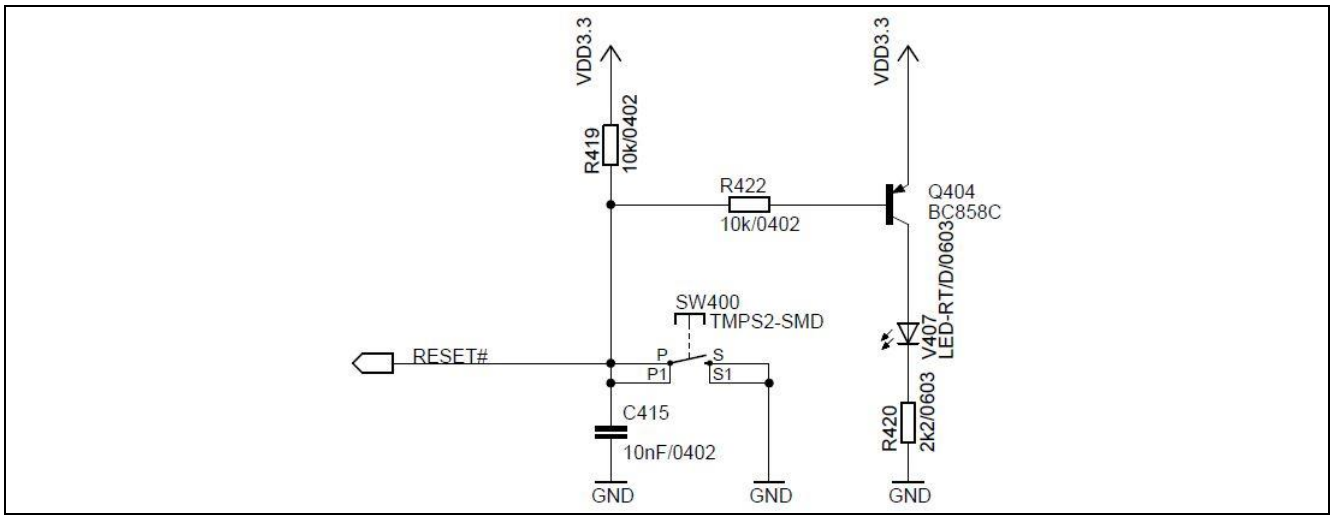

Figure 6 Reset

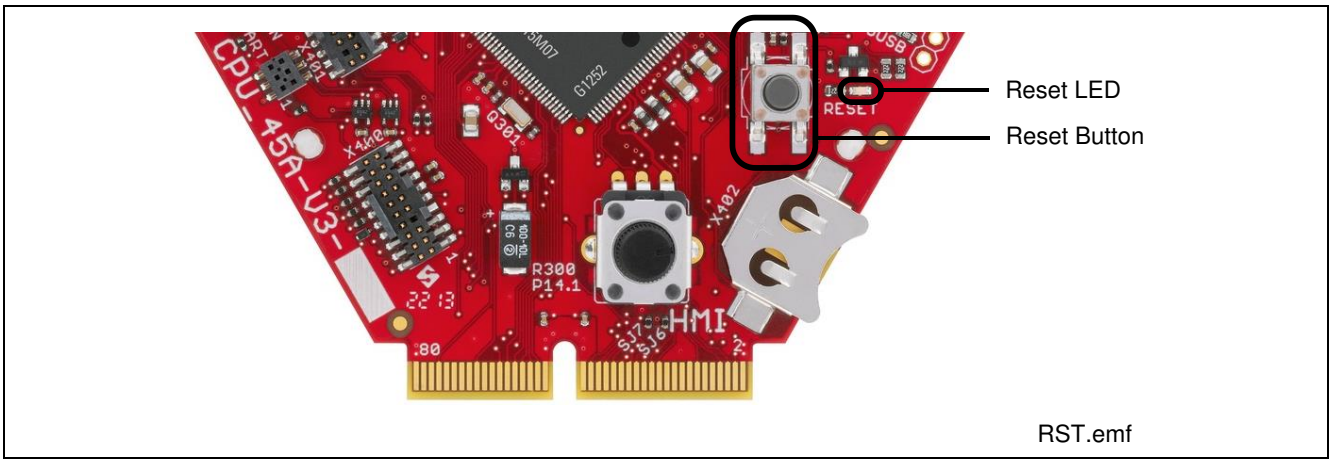

Figure 7 Reset LED and Reset Switch

2.3 Clock Generation

An external 12 MHz crystal provides the clock signal to the XMC4500 microcontroller. The drive strength of the oscillator is set to maximum by software, in order to ensure a safe start-up of the oscillator even under worst case conditions. A serial 510 Ohm resistor will attenuate the oscillations during operations.

For the RTC clock a separate external 32.768 kHz crystal is used on board.

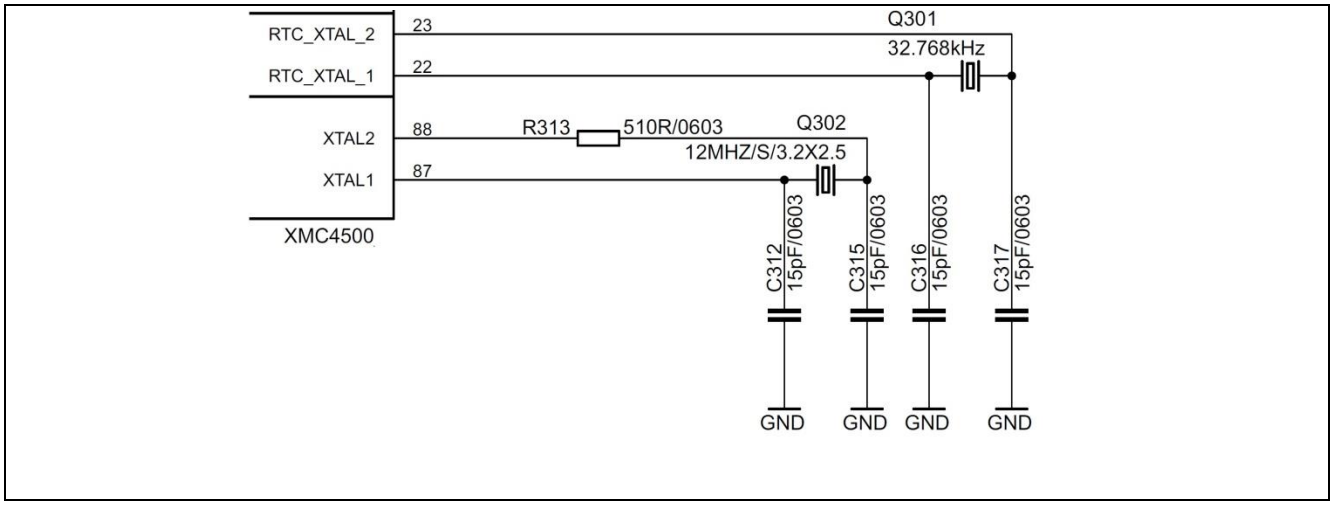

Figure 8 Clock Generation

2.4 Boot Option

During power-on-reset the XMC4500 latches the dip switch SW300 settings via the TCK and the TMS pin. Based on the values latched different boot options are possible.

Table 3 Boot Options Settings

BSL (TMS)	CAN/UART (TCK)	Boot Option
OFF (1)	UART (0)	Normal Mode (Boot from flash)
ON (0)	UART (0)	ASC BSL Enabled (Boot from UART)
OFF (1)	CAN (1)	BMI Customized Boot Enabled
ON (0)	CAN (1)	CAN BSL Enabled (Boot from CAN)

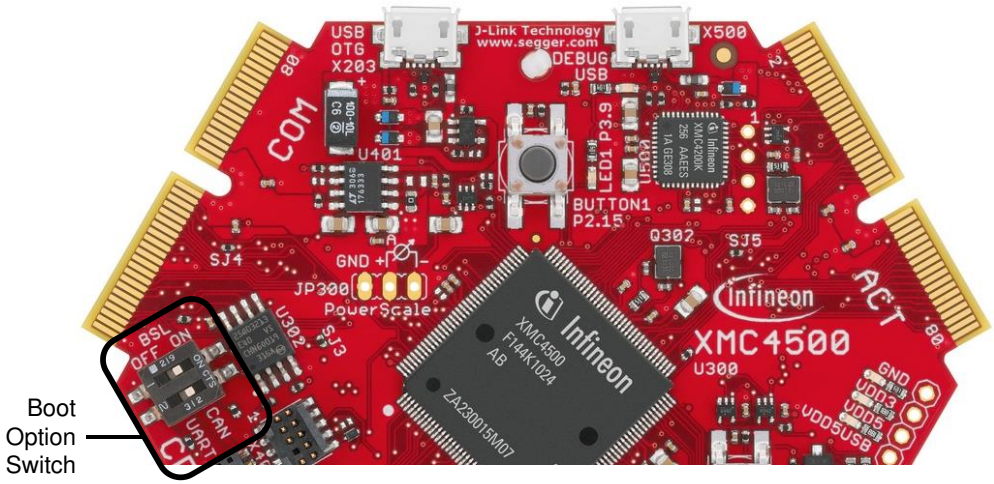

Boot_Switch.emf

Figure 9 Boot Options Switch

2.5 Debug Interface

The CPU_45A-V3 board supports JTAG debug via 3 different connectors.

- On-board Debugger
- Cortex Debug Connector (10-pin)
- Cortex Debug+ETM Connector (20-pin)

The Hexagon Application Boards are designed to use “Serial Wire Debug” as debug interface. JTAG is not supported by default because the GPIO P0.7 (TDI), where the required TDI function is mapped to, is used by various Actuator boards connected to the ACT satellite connector.

Note: It is strongly recommended not to use JTAG debug mode, especially if satellites boards are connected, which uses the GPIO 0.7. For the same reason also do not use the on-board debugger in JTAG mode.

If you want to use the JTAG debug mode through the cortex debug connectors (X400, X401) anyway, enable the JTAG interface of the XMC device by assembling the pull-up resistor R427 (4k7 Ohm) and the resistor R410 (0 - 33 Ohm).

2.5.1 On-board USB Debugger

The on-board debugger supports

- Serial Wire Debug
- Serial Wire Viewer
- Full Duplex UART communication via a USB Virtual COM

The on-board debugger can be accessed through the Debug USB connector shown in Figure 10. The Debug LED V502 shows the status during debugging.

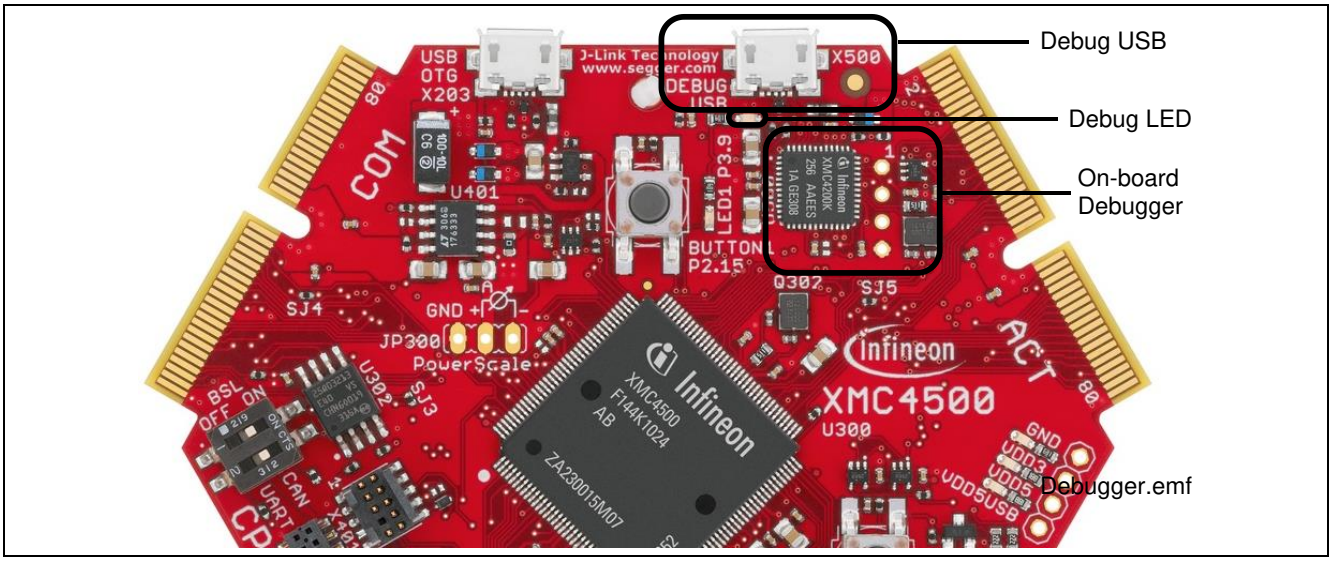

Figure 10 On-Board USB Debugger

When using an external debugger connected to the 10-pin/20-pin Cortex Debug Connector, the on-board debugger is switched off.

When using the USB virtual COM port function of the on-board debugger the UART interface to the COM satellite is disabled through the switches U301 and U303.

2.5.2 Cortex Debug Connector (10-pin)

The CPU_45A-V3 board supports Serial Wire debug operation and Serial Wire viewer operation (via the SWO signal when Serial Wire debug mode is used) through the 10-pin Cortex Debug Connector.

When using an external debugger connected to the 10-pin Cortex Debug Connector, the on-board debugger is switched off.

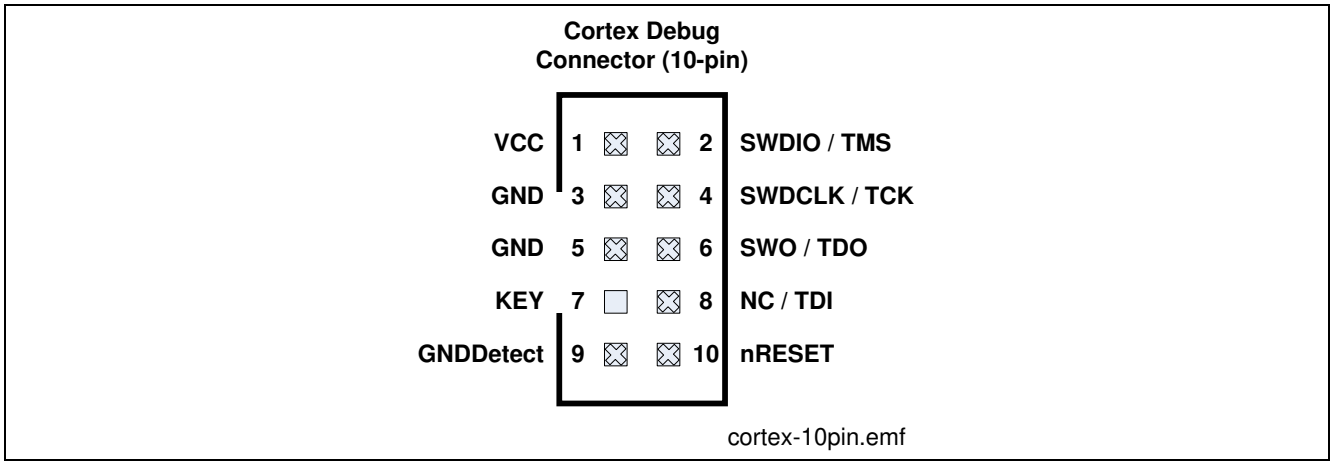

Figure 11 Cortex Debug Connector (10-pin)

Table 4 Cortex Debug Connector (10 Pin)

Pin No.	Signal Name	Serial Wire Debug	JTAG Debug
1	VCC	+3.3 V	+3.3 V
2	SWDIO / TMS	Serial Wire Data I/O	Test Mode Select
3	GND	Ground	Ground
4	SWDCLK / TCK	Serial Wire Clock	Test Clock
5	GND	Ground	Ground
6	SWO / TDO	Trace Data OUT	Test Data OUT
7	KEY	KEY	KEY
8	NC / TDI	Not connected	Test Data IN
9	GNDDetect	Ground Detect	Ground Detect
10	nRESET	Reset (Active Low)	Reset (Active Low)

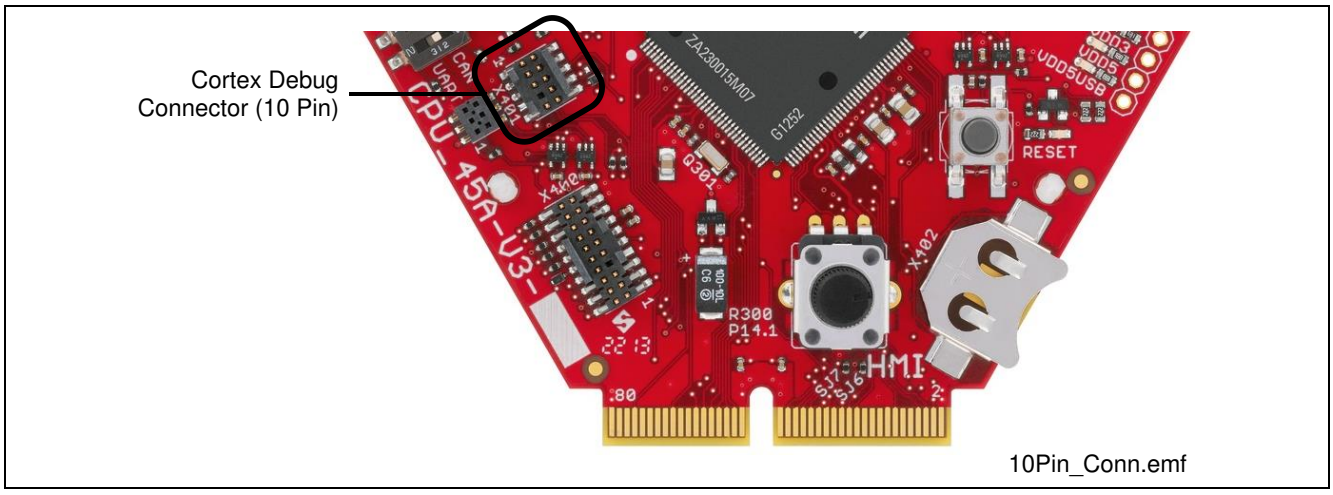

Figure 12 Cortex Debug Connector (10-pin) Layout

2.5.3 Cortex Debug+ETM Connector (20-pin)

The CPU_45A-V3 board supports Serial Wire debug operation, Serial Wire viewer operation (via SWO connection when Serial Wire debug mode is used) and Instruction Trace operation through the 20-pin Cortex Debug+ETM Connector.

JTAG operation additionally would require the TDI (P0.7) signal. By default the TDI signal is disconnected from the Cortex Debug Connectors by a not assembled resistor R410, because the pin P0.7 is used by the Actuator boards connected to the ACT satellite connector.

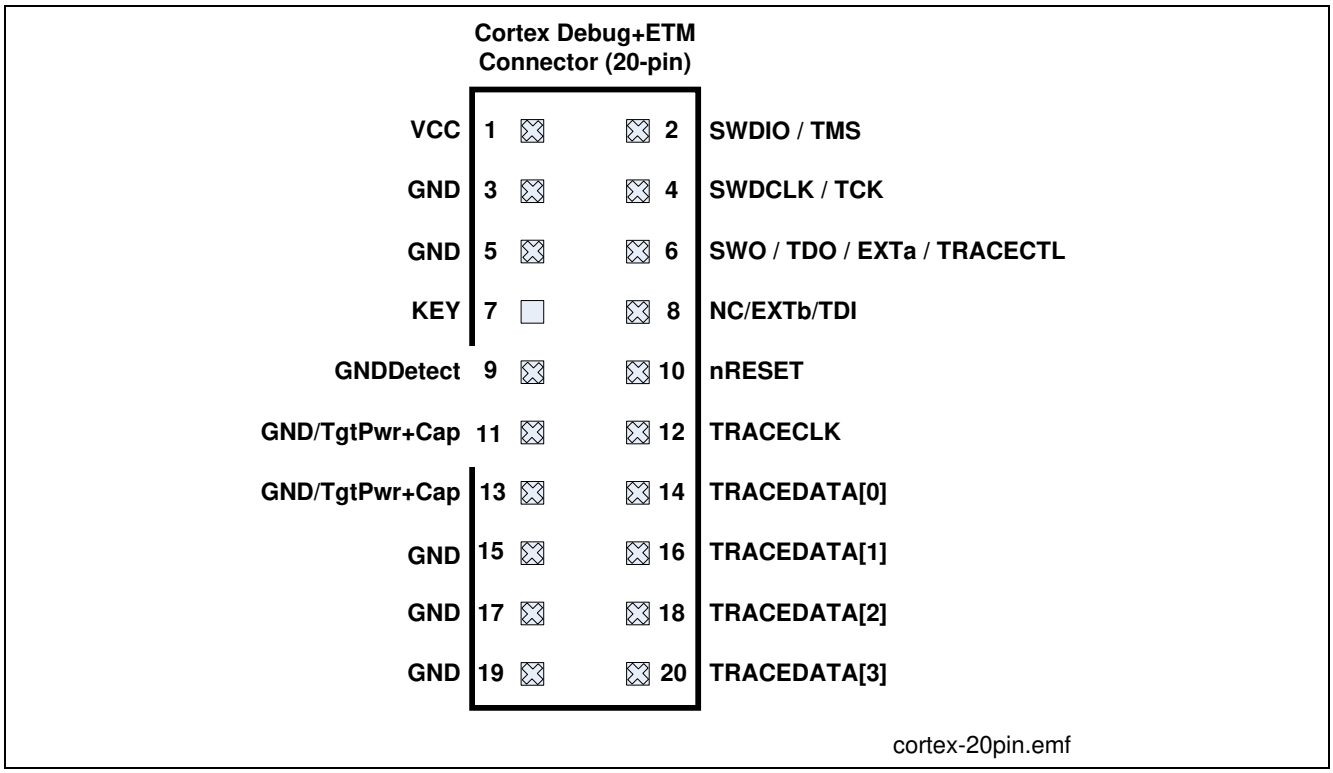

Figure 13 Cortex Debug+ETM Connector (20-pin)

Table 5 Cortex Debug+ETM Connector (20 Pin)

Pin No.	Signal Name	Serial Wire Debug	JTAG Debug
1	VCC	+3.3 V	+3.3 V
2	SWDIO / TMS	Serial Wire Data I/O	Test Mode Select
3	GND	Ground	Ground
4	SWDCLK / TCK	Serial Wire Clock	Test Clock
5	GND	Ground	Ground
6	SWO / TDO	Trace Data OUT	Test Data OUT
7	KEY	KEY	KEY
8	NC / TDI	Not connected	Test Data IN
9	GNDDetect	Ground Detect	Ground Detect
10	nRESET	Reset (Active Low)	Reset (Active Low)
11	GND/TgtPwr+Cap	Ground	Ground
12	TRACECLK	Trace Clock	Trace Clock
13	GND/TgtPwr+Cap	Ground	Ground
14	TRACEDATA[0]	Trace Data 0	Trace Data 0
15	GND	Ground	Ground

Table 5 Cortex Debug+ETM Connector (20 Pin)

Pin No.	Signal Name	Serial Wire Debug	JTAG Debug
16	TRACEDATA[1]	Trace Data 1	Trace Data 1
17	GND	Ground	Ground
18	TRACEDATA[2]	Trace Data 2	Trace Data 2
19	GND	Ground	Ground
20	TRACEDATA[3]	Trace Data 3	Trace Data 3

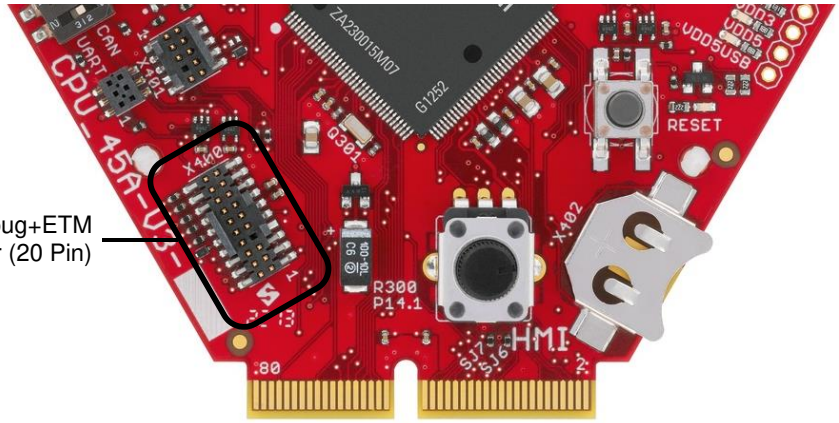

Figure 14 Cortex Debug+ETM Connector (20-pin) Layout

2.6 Serial Flash Memory

The CPU_45A-V3 board provides a 32 Mbit serial flash memory from Micron (type: N25Q03) interfaced to XMC4500 through a SPI interface. The SPI interface can be configured as single, dual or quad SPI.

Table 6 Quad SPI Signals

Pin No.	Pin Description	Signal Name	Signal Description
P0.13	U1C1_SCLKOUT	CLK	Clock
P3.3	U1C1_SELO1	CS#	Active Low Chip Select
P3.15	U1C1_DOUT0	DI (IO0)	Data Input/Output of Flash (MTSR/MOSI)
P3.14	U1C1_DX0B	DO (IO1)	Data Input/Output of Flash (MRST/MISO)
P0.14	U1C1_HOUT3/DWIN3	HOLD# (IO3)	Data Input/Output
P0.15	U1C1_HOUT2/DWIN2	WP# (IO2)	Data Input/Output

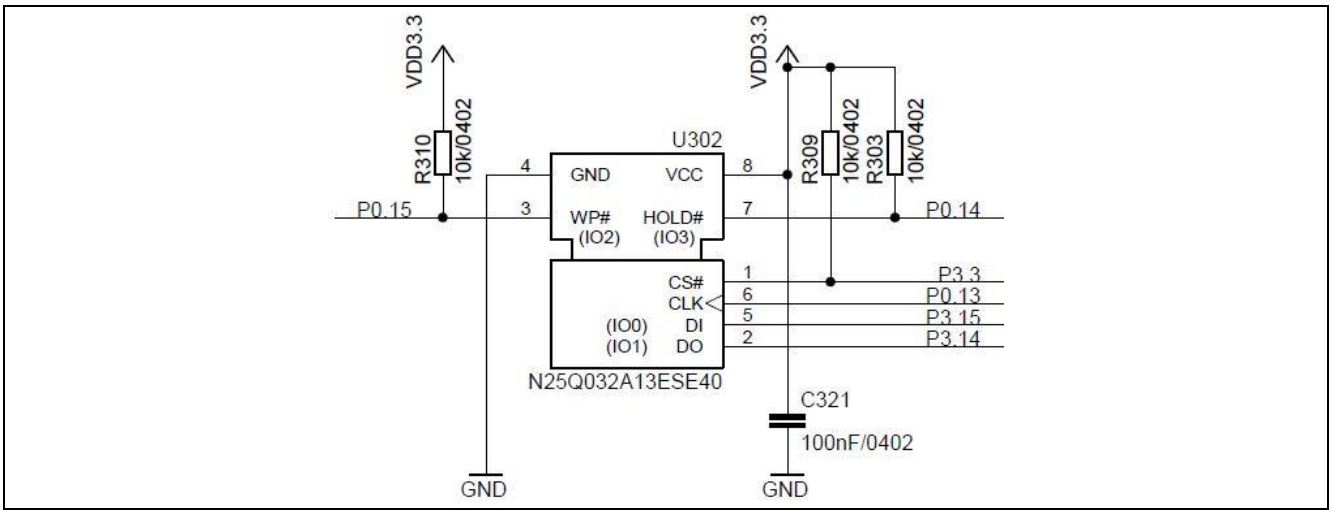

Figure 15 Quad SPI Flash Interface Circuit

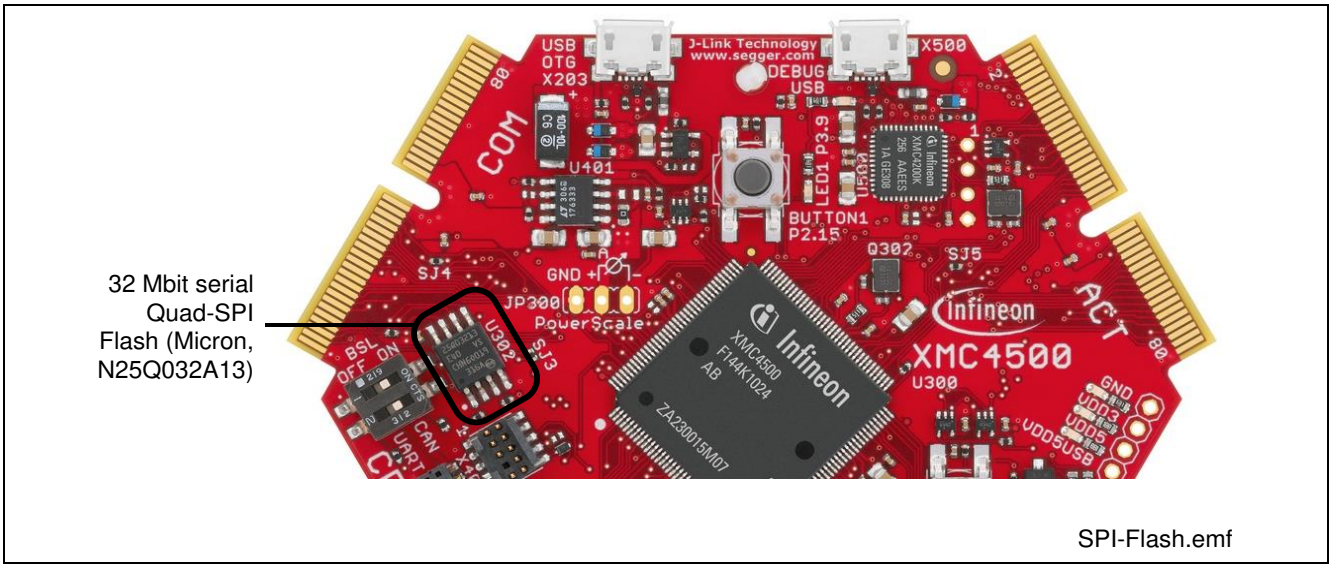

Figure 16 Quad SPI Flash

2.7 USB

The XMC4500 supports USB interface in host only mode, device only mode or as an OTG Dual Role Device (DRD). In USB device mode, power is expected through VBUS (pin 1) from an external host (e.g. PC). When the current is more than 500 mA power from an external source through satellite cards shall be used.

Note: Some PCs, notebooks or hubs have a weak USB supply which is not sufficient for proper supply. In this case use an external 5 Volt power supply or a powered USB hub.

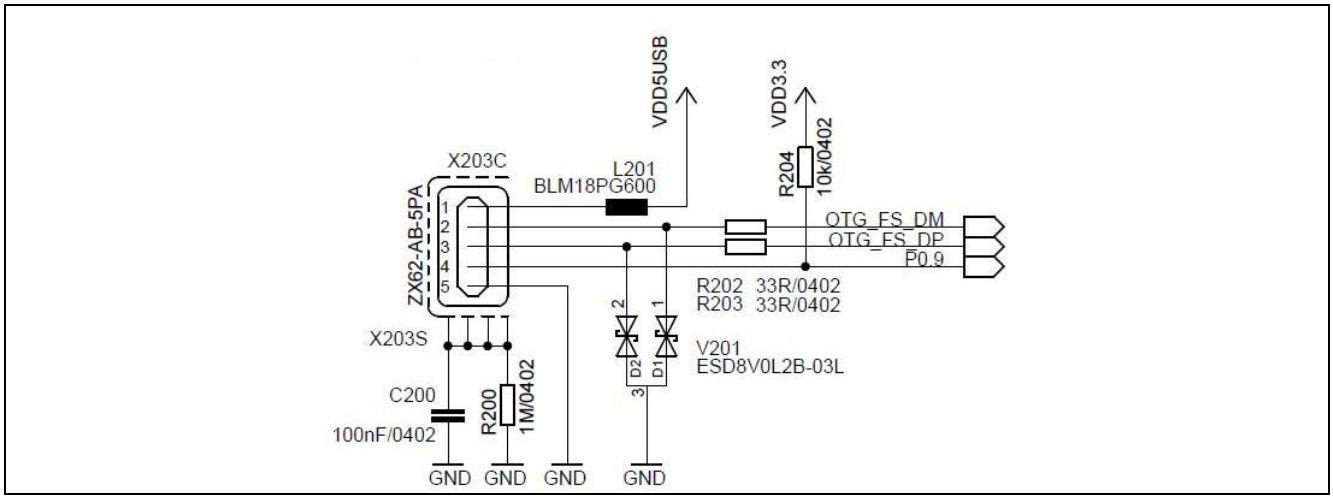

Figure 17 USB Connector Schematic

Port P0.9 of XMC4500 is connected to the USB ID pin (pin 4). An OTG device will detect whether a USB 3.0 Micro-A or Micro-B plug is inserted by checking the ID pin. When the ID = FALSE, Micro-A connector is plugged and when ID = TRUE a Micro-B connector is plugged in. When ID is true the XMC4500 acts as USB host else as USB device.

Table 7 USB micro AB connector Pinout

Pin No.	Pin Name	Pin Description
1	VBUS	5 V
2	D-	Data Minus
3	D+	Data Plus
4	ID	Identification
5	GND	Ground

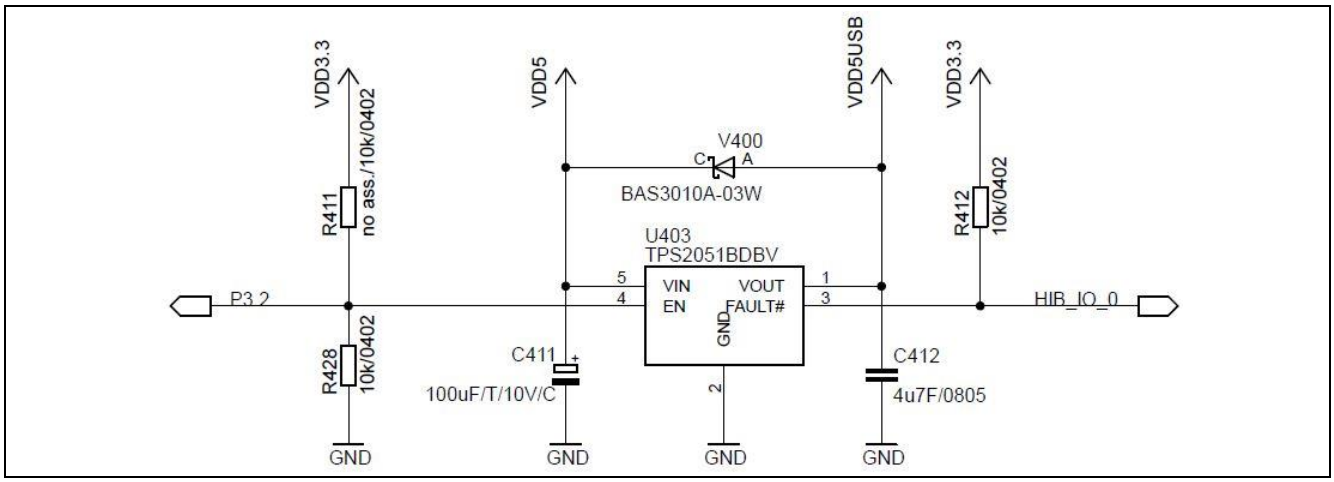

Figure 18 USB power generation - Host/OTG mode

In the host only mode and OTG mode the CPU_45A-V3 board is capable of supplying power to the connected device (e.g. USB mouse). The board has a power-switch which is controlled by the XMC4500. Port P3.2 (active high) is used for this purpose. In the Host/OTG mode a low active FAULT signal indicates to XMC4500 via HIB_IO_0 signal, if more than 500 mA current is drawn by the external device. HIB_IO_0 signal is used as general purpose input pin for this implementation.

Diode V400 will allow powering the board through USB in all USB modes via e.g. a PC.

2.8 RTC

The XMC4400 CPU has two power domains, the Core Domain and Hibernate Domain. The Core Domain (VDDP pins) is connected to the VDD3.3 rail. An on-board LDO voltage regulator generates VDD3.3 (3.3 V) from VDD5 (5 V).

The Hibernate Domain is powered via the auxiliary supply pin VBAT, which is supplied by either a 3 V coin cell (size 1216, 1220, 1225) plugged into the battery holder (see Figure 19) or 3.3 V (VDD3.3) generated by the on-board voltage regulator.

Figure 19 Battery Holder for Coin Cell

The Real Time Clock (RTC) is located in the hibernate domain. The XMC4500 uses the HIB_IO_1 signal (active low) to shut down the external LDO voltage regulator which generates the VDD3.3 (Core Domain). Even if the Core Domain is not powered the Hibernate Domain will operate if VBAT is available. The RTC keeps running as long as the Hibernate Domain is powered via the auxiliary supply VBAT. The RTC is capable to wake-up the whole system from Hibernate mode by setting HIB_IO_1 to high.

With VDD3.3 power supply switched off and no coin cell supply the power in the capacitor connected to VBAT will provide power to the hibernate domain for about 10 seconds (depending on which features in the hibernate domain are enabled).

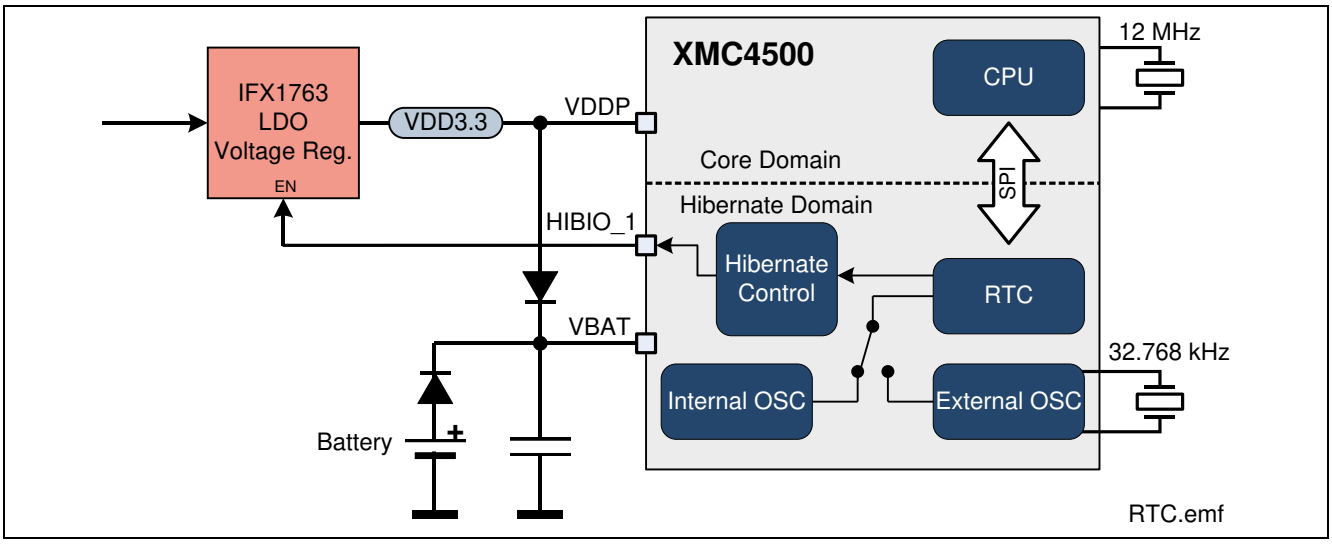

Figure 20 RTC

2.9 User LEDs and User Buttons

The port pin P3.9 of XMC4500 is connected to a LED V300. More user LED's are available through I2C GPIO expander on most of the satellite cards.

Table 8 GPIO LED

LED	Connected to Port Pin
V300	GPIO P3.9

The User Button is connected to port pin P2.15 of the XMC4500.

Table 9 User Button

Button	Connected to Port Pin
BUTTON1	P2.15

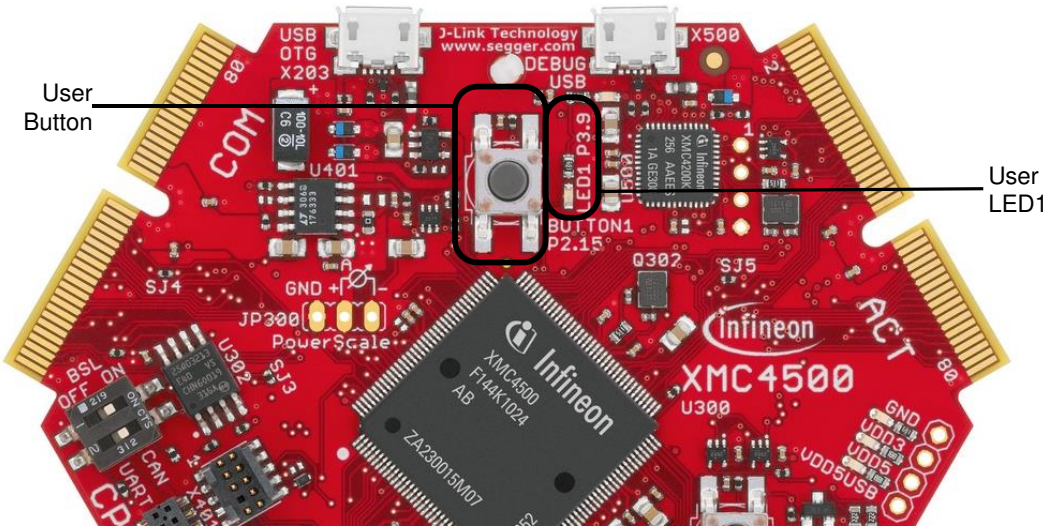

Button_LED.emf

Figure 21 GPIO LED

2.10 Potentiometer

The CPU_45A-V3 board provides a potentiometer POT1 for ease of use and testing of the on-chip analog to digital converter. The potentiometer is connected to the analog input G0_CH1 (P14.1). The analog output of the potentiometer ranges from 0 V to 3.3 V.

Table 10 Potentiometer

R300	P14.1 / G0_CH1 (Group 0, Channel 1)

2.11 Satellite Connectors

The CPU_45A-V3 board provies three satellite connectors for application extension by satellite cards:

- COM satellite connector (Communication)
- HMI satellite connector (Human Machine Interface)
- ACT satellite connector (Actuator)

Note: Satellite cards shall be connected to their matching satellite connectors only. (For e.g. COM satellite cards shall be connected to COM satellite connector only)

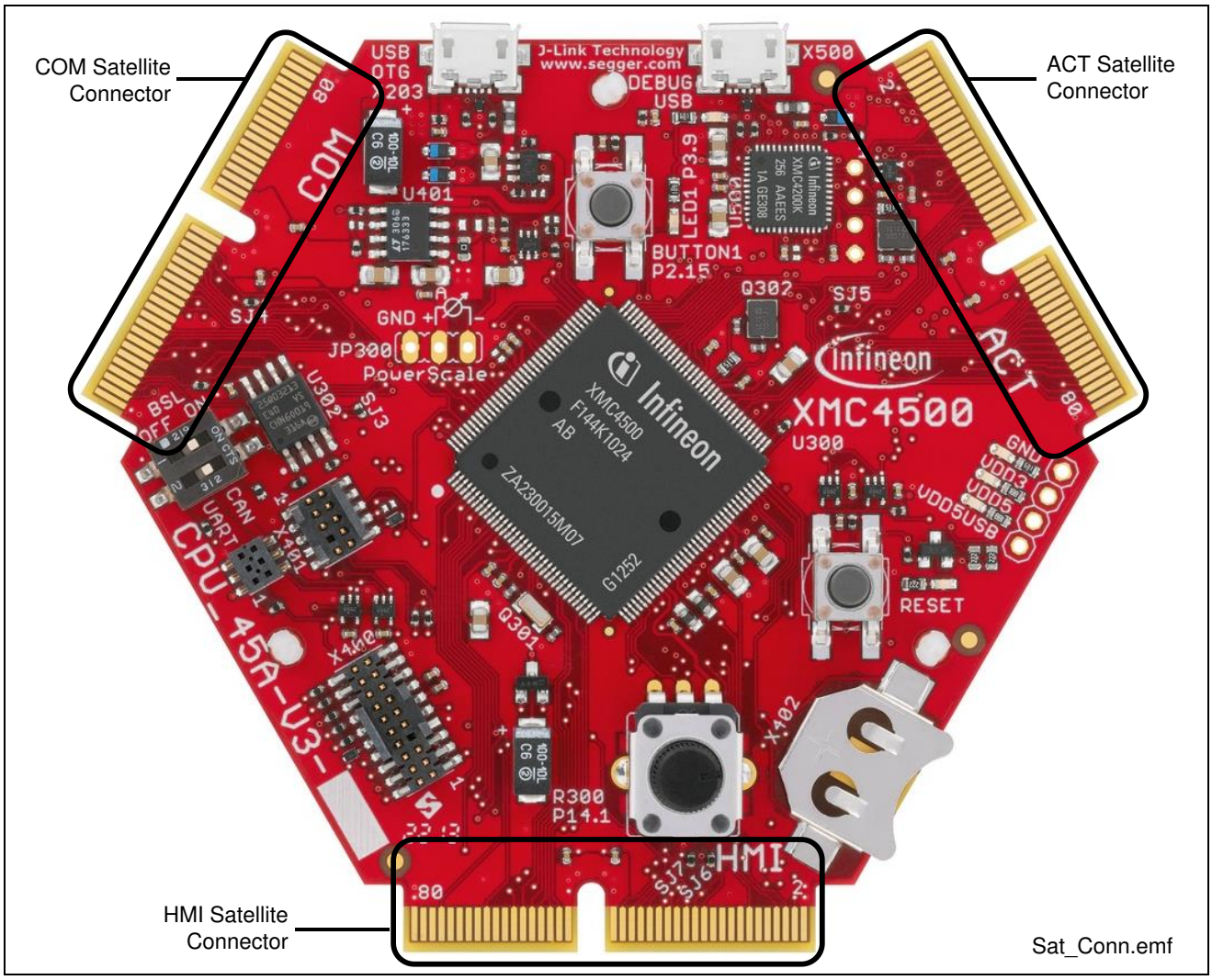

Figure 22 Satellite Connectors

2.11.1 COM Connector

The COM satellite connector on the CPU_45A-V3 board allows interface expansion through COM satellite cards (e.g. COM_ETH-V1)

CPU_45A-V3		Satellite Connector				CPU_45A-V3	
XMC Pin	XMC Function	Function	Pin	Pin	Function	XMC Function	XMC Pin
			COM				
VSS	GND	GND	1	2	GND	GND	VSS
P0.13	U1C1_SCLKOUT	qSPI_SCLK	3	4	qSPI_D0	U1C1_DOUT0	P3.15
P0.12	U1C1_SELO0	qSPI_CS	5	6	qSPI_D1	U1C1_DOUT1	P3.14
P3.3	U1C1_SELO1	qSPI_CS	7	8	qSPI_D2	U1C1_DOUT2	P0.15
nc	nc	RSVD	9	10	qSPI_D3	U1C1_DOUT3	P0.14
nc	nc	RSVD	11	12	RSVD	nc	nc
P2.3	ETH0_RXD1A	ETH_RMII	13	14	ETH_RMII	ETH0_TXD1	P2.9
P2.2	ETH0_RXD0A	ETH_RMII	15	16	ETH_RMII	ETH0_TXD0	P2.8
P2.0	ETH0_MDO	ETH_RMII	17	18	ETH_RMII	ETH0_CRS_DVC	P15.9
P2.7	ETH0_MDC	ETH_RMII	19	20	ETH_RMII	ETH0_RXERD	P5.3
P5.9	ETH0_TX_EN	ETH_RMII	21	22	ETH_RMII	ETH0_CLK_RMIIC	P15.8
nc	nc	RSVD	23	24	GND	GND	VSS
P3.10	P3.10	ASC_DIR	25	26	RSVD	nc	nc
P1.4 (3)	U0C0_DX0B	ASC_RXD	27	28	CAN_TXD	CAN_N2_TXD	P1.9
P1.5 (3)	U0C0_DOUT0	ASC_TXD	29	30	CAN_RXD	CAN_N2_RXDA	P1.8
P5.5	P5.5	SPI_CSC0	31	32	SPI_MTSR	U0C1_DOUT0	P3.13
P3.1	U0C1_SELO0	SPI_CSC1	33	34	SPI_MRST	U0C1_DX0B	P2.5
nc	nc	SPI_CSC2	35	36	SPI_SCLK	U0C1_SCLKOUT	P3.0
P2.14	U1C0_DOUT0/DX0D	I2C_SDA	37	38	I2C_SCL	U1C0_SCLKOUT	P5.8
P14.13	P14.13	COM_GPIO1	39	40	GPIO	P0.6	P0.6
P3.7	P3.7	COM_GPIO0	41	42	RESET	RESET#	PORST
		VDD5	43	44	VDD5		
			COM				
		VDD5	45	46	VDD5		
nc	nc	EBU_ADV	47	48	EBU_AD	nc	nc
nc	nc	EBU_WR	49	50	EBU_AD	nc	nc
nc	nc	EBU_RD	51	52	EBU_AD	nc	nc
nc	nc	EBU_BC	53	54	EBU_AD	nc	nc
nc	nc	EBU_BC	55	56	EBU_AD	nc	nc
nc	nc	EBU_CS	57	58	EBU_AD	nc	nc
nc	nc	EBU_CS	59	60	EBU_AD	nc	nc
VSS	GND	GND	61	62	EBU_AD	nc	nc
nc	nc	EBU_A	63	64	EBU_AD	nc	nc
nc	nc	EBU_A	65	66	EBU_AD	nc	nc
nc	nc	EBU_A	67	68	EBU_AD	nc	nc
nc	nc	EBU_A	69	70	EBU_AD	nc	nc
nc	nc	EBU_A	71	72	EBU_AD	nc	nc
nc	nc	EBU_A	73	74	EBU_AD	nc	nc
nc	nc	EBU_A	75	76	EBU_AD	nc	nc
nc	nc	EBU_A	77	78	EBU_AD	nc	nc
VSS	GND	GND	79	80	GND	GND	VSS
			COM				

Figure 23 Satellite Connector Type COM

(3) This pin is connected with the satellite connector via an analog switch

2.11.2 HMI Connector

The HMI satellite connector on the CPU_45A-V3 board allows interface expansion through HMI satellite cards.

CPU_45A-V3		Satellite Connector			CPU_45A-V3	
XMC Pin	XMC Function	Function	Pin	Function	XMC Function	XMC Pin
VSS	GND	GND	2	GND	GND	VSS
P0.11	MMC_nRST	MMC_nRST	4	MMC_CLK	MMC_CLK_OUT	P3.6
P4.0	MMC_DATA0_OUT	MMC_DATA0	6	MMC_DATA1	MMC_DATA1_OUT	P1.6
P1.7	MMC_DATA2_OUT	MMC_DATA2	8	MMC_DATA3	MMC_DATA3_OUT	P4.1
nc	nc	MMC_DATA4	10	MMC_DATA5	nc	nc
nc	nc	MMC_DATA6	12	MMC_DATA7	nc	nc
P3.5	MMC_CMD_OUT	MMC_CMD	14	MMC_BUSPOW	GND	VSS
VSS	GND	MMC_LED	16	MMC_nSDCD	nc	nc
nc	nc	MMC_SDWC	18	RSVD	nc	nc
nc	nc	RSVD	20	RSVD	nc	nc
nc	nc	RSVD	22	RSVD	nc	nc
P5.11	P5.11	OLED_CMD	24	AudioRST	P2.10	P2.10
P3.13	U0C1_DOUT0	I2S_MTSR	26	I2S_WA	U0C1_SELO0	P3.1
P2.5	U0C1_DX0B	I2S_MRST	28	I2S_MCLK	nc	nc
P3.0	U0C1_SCLKOUT	I2S_SCLK	30	I2S_SYNCLK	nc	nc
P3.13	U0C1_DOUT0	SPI_MTSR	32	SPI_CSH0	U0C1_SELO1	P3.12
P2.5	U0C1_DX0B	SPI_MRST	34	SPI_CSH1	U0C1_SELO0	P3.1
P3.0	U0C1_SCLKOUT	SPI_SCLK	36	SPI_CSH2	U0C1_SELO3	P3.8
P5.8	U1C0_SCLKOUT	I2C_SCL	38	I2C_SDA	U1C0_DX0D/DOUT0	P2.14
P0.6	P0.6	GPIO	40	HMI_GPIO1	P15.5 Input	P15.5
PORST	RESET#	RESET	42	HMI_GPIO0	P5.6	P5.6
		VDD5	44	VDD5		
		VDD5	46	VDD5		
VAREF	VAREF	AREF	48	AGND	AGND	VAGND
P14.8	VADC_G1CH0	DAC0/ADC0	50	DAC1/ADC1	VADC_G1CH1	P14.9
P14.4	VADC_G0CH4	ADC2/DACREF	52	ADC3/ORC0	VADC_G0CH6	P14.6
P14.3	VADC_G0CH3	ADC14	54	ADC15	VADC_G1CH4	P14.12
P15.3	VADC_G2CH3	ADC16	56	ADC17	VADC_G3CH5	P15.13
P15.2	VADC_G2CH2	ADC18	58	ADC19	VADC_G3CH4	P15.12
nc	nc	RSVD	60	RSVD	nc	nc
nc	nc	RSVD	62	RSVD	nc	nc
P5.10	LEDTS0_TSIN7A	TP7	64	RSVD	nc	nc
nc	nc	TP6	66	TPx1	nc	nc
nc	nc	TP5	68	TPx0	nc	nc
nc	nc	TP4	70	COL3	nc	nc
nc	nc	TP3	72	COL2	nc	nc
P2.4	LEDTS0_TSIN2A	TP2	74	COL1	nc	nc
nc	nc	TP1	76	COL0	LEDTS0_COL1	P0.10
nc	nc	TP0	78	COLA	LEDTS0_COLA	P5.7
VSS	GND	GND	80	GND	GND	VSS

Figure 24 Satellite Connector Type HMI